PV Inverter

SUNNY TRIPOWER 8000TL / 10000TL / 12000TL / 15000TL / 17000TL

Installation Manual

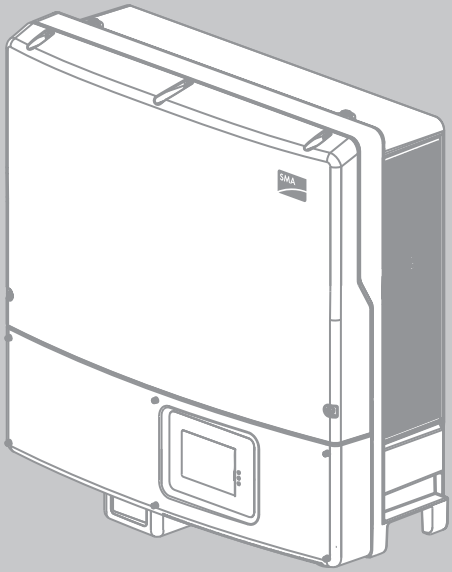

STP8-17TL-IA-en-31 | IMEN-STP10-17TL | Version 3.1

EN

Table of Contents

1 Information on this Manual 7
1.1 Validity 7
1.2 Target Group 7
1.3 Additional Information 7
1.4 Symbols Used 8
2 Safety 9
2.1 Intended Use 9
2.2 Safety Precautions 10
2.3 Explanation of Symbols 11
2.3.1 Symbols on the Inverter 11
2.3.2 Symbols on the Type Label 12
3 Product Description 14
3.1 *Bluetooth* 14
3.2 Communication Interface 14
3.3 Multi-Function Interface 15
3.4 SMA OptiTrac Global Peak 15
3.5 Surge Arrester Type II 15
3.6 Intelligent String Failure Detection 16
3.7 Electronic String Fuse 17
3.8 Grid Management 17
4 Unpacking 18
4.1 Scope of Delivery 18
4.2 Identifying the Inverter 19
5 Mounting 20
5.1 Safety 20
5.2 Selecting the Mounting Location 21
5.3 Mounting the Inverter with Rear Panel 22

6 Electrical Connection 27
6.1 Safety 27
6.2 Overview of the Connection Area 27
6.3 Connecting the Electricity Grid (AC) 29
6.3.1 Conditions for the AC Connection 29
6.3.2 AC Connection Procedure 31
6.3.3 Connecting the Second Protective Conductor 33
6.4 Connecting the PV Array (DC) 34
6.4.1 Conditions for DC Connection 34
6.4.2 Assembling the DC Connectors 37
6.4.3 Opening the DC Connector 39
6.4.4 Connecting the PV Array (DC) 40
6.5 Setting the Country Standard and Display Language 45
6.5.1 Checking the Country Standard 47
6.5.2 Extension of the Deactivation Limits 51
6.5.3 Setting the Country Standard and Language using the Rotary Switch 52
6.6 Communication 53
6.6.1 *Bluetooth* 53
6.7 Retrofitting a Surge Arrester Type II 55
7 Commissioning 58
7.1 Commissioning the Inverter 58
7.2 Display Messages during the Start Phase 60
8 Configuration 61
8.1 Changing the Plant Time and Plant Password 61
8.2 Activating and Setting SMA OptiTrac Global Peak 61
8.3 Activating the Intelligent String Failure Detection 62
9 Disconnecting the Inverter from Voltage Sources 63
9.1 Safety 63
9.2 Procedure 64

10 Maintenance and Cleaning 67
10.1 Cleaning the Inverter 67
10.2 Checking Heat Dissipation 67
10.2.1 Cleaning the Ventilation Grids 68
10.2.2 Cleaning the Fan at the Bottom of the Inverter (STP 15000TL and STP 17000TL only) 69
10.2.3 Cleaning the Fan on the Left-hand Side of the Inverter Enclosure . . 70
10.2.4 Checking the Fans 71
10.3 Checking the Electronic Solar Switch (ESS) for Wear 72
11 Messages 73
11.1 Event Messages 73
11.2 Error messages 74
12 Troubleshooting 84
12.1 Sunny Tripower is Beeping 84
12.2 Checking the PV Array for Earth Faults 85
12.3 Checking the Function of the Varistors 87
12.4 Replacing Surge Arresters Type II 90
13 Decommissioning 92
13.1 Dismantling the Inverter 92
13.2 Replacing the Enclosure Lid 92
13.3 Packing the Inverter 94
13.4 Storing the Inverter 94
13.5 Disposing of the Inverter 94
14 Technical Data 95
14.1 Sunny Tripower 8000TL 95
14.2 Sunny Tripower 10000TL 101
14.3 Sunny Tripower 12000TL 107
14.4 Sunny Tripower 15000TL 113
14.5 Sunny Tripower 17000TL 119

15 Accessories 125
16 Contact 126

1 Information on this Manual

1.1 Validity

This manual describes the procedure for mounting, installation, commissioning, maintenance and troubleshooting of the following SMA inverters:

- Sunny Tripower 8000TL (STP 8000TL-10)
- Sunny Tripower 10000TL (STP 10000TL-10)
- Sunny Tripower 12000TL (STP 12000TL-10)
- Sunny Tripower 15000TL (STP 15000TL-10)
- Sunny Tripower 17000TL (STP 17000TL-10)

Store this manual where it will be accessible at all times.

1.2 Target Group

This manual is for the use of electrically skilled persons. The tasks described in this manual may be performed by electrically skilled persons only.

1.3 Additional Information

You will find further information on special topics such as the sizing of a miniature circuit-breaker or the description of the parameters and measured values at www.SMA.de/en.

Refer to the user manual provided for detailed information on how to operate the inverter.

1.4 Symbols Used

The following types of safety precautions and general information appear in this document:

⚠ DANGER

DANGER indicates a hazardous situation which, if not avoided, will result in death or serious injury.

⚠ WARNING

WARNING indicates a hazardous situation which, if not avoided, could result in death or serious injury.

⚠ CAUTION

CAUTION indicates a hazardous situation which, if not avoided, could result in minor or moderate injury.

NOTICE

NOTICE indicates a situation which, if not avoided, could result in property damage.

Information

An Information block provides valuable hints for the efficient installation and operation of your product.

☑ This symbol indicates the result of an action.

2 Safety

2.1 Intended Use

The Sunny Tripower is a PV inverter which converts the direct current of a PV array into alternating current and feeds this into the electricity grid.

Principle of a PV plant with the Sunny Tripower

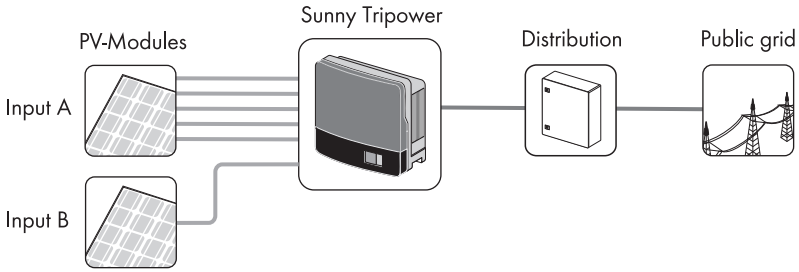

String connections on Sunny Tripower 8000TL, 10000TL and 12000TL

The Sunny Tripower 8000TL, 10000TL and 12000TL only have 4 string connections at input A.

The Sunny Tripower may only be operated with PV arrays (PV modules and cabling) of protection class II. Do not connect any energy sources other than PV modules to the Sunny Tripower.

Capacitive leakage currents

PV modules with large capacities relative to earth, such as thin-film PV modules with cells on a metal substrate, may only be used if their coupling capacity does not exceed 2.55 µF.

During feed-in operation, a leakage current flows from the cells to earth, the size of which depends on the manner in which the PV modules are installed (e.g. foil on metal roof) and on the weather (rain, snow). This "normal" leakage current must not exceed 90 mA, as otherwise the inverter would automatically disconnect from the electricity grid as a protective measure. For further information on this subject see the Technical Information "Capacitive Leakage Currents" at www.SMA.de/en.

When designing the PV plant, ensure that the permitted operating range of all components is complied with at all times. The free design program "Sunny Design", version 2.0 or higher (see www.SMA.de/en/SunnyDesign) will assist you in this. The manufacturer of the PV modules must have approved the PV modules for use with the Sunny Tripower. You must also ensure that all measures recommended by the module manufacturer for the long-term maintenance of the module properties are taken (see also Technical Information "Module Technology" at www.SMA.de/en).

Do not use the Sunny Tripower for purposes other than those described here. Alternative uses, modifications to the Sunny Tripower or the installation of components not expressly recommended or sold by SMA Solar Technology AG void the warranty claims and operation permission.

2.2 Safety Precautions

⚠ DANGER

Danger to life due to high voltages in the inverter

- All work on the inverter must be carried out by skilled persons only.

⚠ CAUTION

Risk of burns due to hot enclosure parts

During operation, the upper enclosure lid and the enclosure body may get hot.

- Only touch the lower enclosure lid during operation.

⚠ CAUTION

Possible damage to health due to radiation effects

- Maintain a distance of at least 20 cm from the inverter whenever possible.

Earthing of the PV array

Comply with the local regulations for earthing the modules and the PV array.
SMA Solar Technology AG recommends the continuously conductive connection and earthing of the array frame and other electrically conductive surfaces in order to ensure maximum protection for property and persons.

2.3 Explanation of Symbols

This section gives an explanation of all the symbols found on the inverter and on the type label.

2.3.1 Symbols on the Inverter

Symbol	Description	Explanation
	Inverter	This symbol defines the function of the green LED. The green LED indicates the operating state of the inverter.
	Observe the documentation	This symbol defines the function of the red LED which indicates a fault or disturbance. Read the manual to remedy the fault or disturbance.
	Bluetooth	This symbol defines the function of the blue LED. The blue LED indicates that communication via *Bluetooth* is activated.
	QR Code® for SMA Bonus Program	For information on the SMA bonus programme, see www.SMA-Bonus.com.
	Danger to life due to high voltages in the inverter	The capacitors in the inverter may be charged with very high voltages. • Disconnect the inverter from all voltage sources (see Section 9) and wait 20 minutes before opening the upper enclosure lid, in order to allow the capacitors to discharge.
	Stickers on the ESS	• ❶ When the Electronic Solar Switch is plugged in, the DC circuit is closed. • ⓪ To interrupt the DC circuit and safely disconnect the inverter when under load, you must first remove the Electronic Solar Switch ❶ and then all DC connectors ❷ (see Section 9 "Disconnecting the Inverter from Voltage Sources", page 63). Only unplug the Electronic Solar Switch If the inverter is not displaying any error message prohibiting the removal of the ESS and the inverter is not beeping.

2.3.2 Symbols on the Type Label

Symbol	Description	Explanation
	Danger to life due to high voltages	The product operates at high voltages. All work on the inverter must be carried out by skilled persons only.
	Risk of burns from hot surfaces	The product can get hot during operation. Avoid contact during operation. Allow the product to cool down sufficiently before carrying out any work. Wear personal protective equipment such as safety gloves.
	Observe the documentation	Observe all documentation that is supplied with the product.
	Danger	Observe the connection requirements for the second protective conductor (see Section 6.3.3 "Connecting the Second Protective Conductor", page 33).
	Without transformer	The product does not have a transformer.
DC	DC	Direct current
AC 3N	AC	Three-phase alternating current with neutral conductor
IP65	Degree of protection	The product is protected against dust intrusion and water jets from any angle.
	Outdoor	The product is suitable for outdoor installation.
	WEEE designation	Do not dispose of the product together with the household waste but only in accordance with the locally applicable regulations for disposal of electronic waste.
CE	CE marking	The product complies with the requirements of the applicable EC directives.
	Device class ID	The product is equipped with a wireless component and complies with device class 2.

Symbol	Description	Explanation
	RAL quality mark for solar products	The product complies with the requirements of the German Institute for Quality Assurance and Certification.
	Certified safety	The product is VDE-tested and complies with the requirements of the German Equipment and Product Safety Act.
N23114	C-Tick	The product complies with the requirements of the applicable Australian EMC standards.
	Korean mark of conformity	The product complies with the requirements of the applicable Korean directives.

3 Product Description

The Sunny Tripower is a multi-string inverter which converts the direct current of a PV array into alternating current. To do this, the Sunny Tripower is equipped with two separate MPP trackers which can be connected to the different PV modules. The inverter performs three-phase feed-in of electricity into the electricity grid. Cooling is effected via the OptiCool active cooling system.

In addition, Sunny Tripower is equipped with the features described below.

3.1 *Bluetooth*

The inverter is equipped with a serial *Bluetooth* interface and can communicate with special SMA communication products and other inverters (for information on supported products, see www.SMA-Solar.com).

If you would like to communicate via *Bluetooth*, you can protect the inverter with one plant password for the user and one plant password for the installer. All inverters are delivered with a standard plant password for the user (0000) and a standard plant password for the installer (1111).

To protect the plant from unauthorized access, you must change the plant passwords using Sunny Explorer (for information on changing the plant password, refer to the Sunny Explorer help).

If you do not want to communicate via *Bluetooth*, deactivate *Bluetooth* communication (see Section 6.6.1 "Bluetooth", page 53).

3.2 Communication Interface

The inverter can optionally be fitted with an extra communication interface (e.g., RS485). This communication interface enables the inverter to communicate with special SMA communication products or other inverters (for information on supported products, see www.SMA-Solar.com).

The interface can either be retrofitted or installed at the factory according to a specific order.

You can only set the operating parameters of the inverter via SMA communication products. You can set the country data set of the inverter via the two rotary switches in the inverter only prior to commissioning or within the first ten operating hours.

Depending on the type of communication, RS485 or *Bluetooth* or Speedwire, the parameters and messages are displayed differently in the communication products.

Example: How the country data set parameter is displayed

- For communication with RS485 parameter: **CntrySet**
- If you are using *Bluetooth* or Speedwire: parameter **Set country standard**

3.3 Multi-Function Interface

The inverter is equipped with a slot for multi-function interfaces. This slot is designed to connect a simple multi-function relay or an SMA Power Control Module. The interface can either be retrofitted or installed at the factory according to a specific order.

Multi-function relay

You can configure the multi-function relay for various operating modes. The multi-function relay is used, for example, to switch fault indicators on or off (for information on installation and configuration, see installation manual of the multi-function relay).

SMA Power Control Module

The SMA Power Control Module enables the inverter to implement grid management services and is equipped with an additional multi-function relay (for information on installation and configuration, see installation manual of the SMA Power Control Module).

3.4 SMA OptiTrac Global Peak

SMA OptiTrac Global Peak is a more advanced form of the MPP tracking tool SMA OptiTrac.

MPP tracking is a feature that determines the highest usable power in the PV plant at any given time. The power generated by the PV array depends on the level of solar irradiation and the temperature of the PV modules. As a result, the optimum operating point for maximum power (MPP) changes constantly throughout the day.

SMA OptiTrac ensures that the operating point of the inverter always coincides exactly with the MPP. In addition, with the aid of SMA OptiTrac Global Peak, the inverter can detect the presence of several maximum power points in the available operating range, such as may occur particularly with partially shaded PV strings. By this means, almost the entire available power of partially shaded PV strings can be fed into the electricity grid.

SMA OptiTrac Global Peak is deactivated by default. In the case of partially shaded PV modules, it should be activated and set via a communication product (see Section 8.2 "Activating and Setting SMA OptiTrac Global Peak", page 61).

3.5 Surge Arrester Type II

Along with the standardly integrated, thermally monitored varistors, the Sunny Tripower is equipped with module slots for the additional installation of surge arresters Type II. If the modules are connected, they will be monitored. If a module has tripped, a warning is issued via the display or external communication (e.g. Sunny WebBox or Sunny Explorer). This makes it easy to integrate the Sunny Tripower into a lightning protection concept. The required modules are available as retrofit kits for input A or input A+B.

3.6 Intelligent String Failure Detection

The Sunny Tripower is equipped with a system that recognizes the total failure of individual strings or partial strings (see the diagram below). With a PV module current of approx. 1 A, monitoring of up to six partial strings per string input is possible. The prerequisite for the reliable functioning of the intelligent string failure detection is an identical alignment of the connected PV array at input A and input B. For the learning phase, the Sunny Tripower needs approximately 14 days at moderate irradiation after successful activation. One advantage of this system is that its auto-adaptive function completely eliminates the necessity of any configuration. In the event of a string failure, a warning message is issued on the display or via external communication (e.g. Sunny WebBox or Sunny Explorer). Note that extreme shading and snow-covered PV modules trip warning messages.

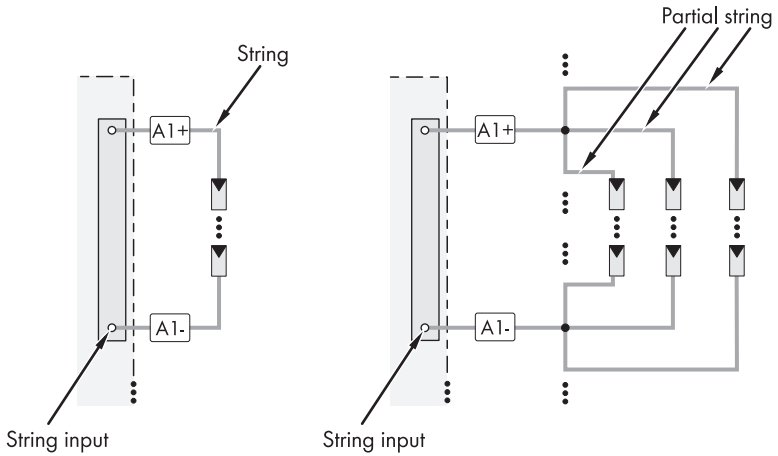

3.7 Electronic String Fuse

The Sunny Tripower is equipped with an electronic string fuse. This prevents dangerous reverse currents in the PV array and thus plays a key role in fire prevention. Reverse currents can occur as a result of reverse poling during installation or module defects during operation. The electronic string fuse recognizes these defects and shorts the PV array. This prevents the occurrence of reverse currents and thus safeguards both the PV plant and the Sunny Tripower. An advantage of this method is that conventional fuses at the DC inputs are not necessary. The electronic solution is entirely maintenance-free and does not require any dimensioning.

In order to make optimum use of this function, particular care must be taken during commissioning (see Section 6.4 "Connecting the PV Array (DC)", page 34). The Sunny Tripower signals dangerous conditions by beeping and issuing warnings in the display or external communication (see Section 12.1 "Sunny Tripower is Beeping", page 84). If electrical installation takes place under conditions of insufficient irradiation (PV voltage less than 188 V), the Sunny Tripower will not have power supply which means that the protective functions described above will not be active during installation.

3.8 Grid Management

The inverter is equipped with grid management functions.

Depending on the requirements of the network operator, you can activate and configure the functions (e.g. provision of reactive power, active power limitation) via operating parameters (for information on the functions and operating parameters, see the Technical Description "Measured Values and Parameters" at www.SMA-Solar.com).

4 Unpacking

4.1 Scope of Delivery

Check the delivery for completeness and for any visible external damage. Contact your specialist dealer if anything is damaged or missing.

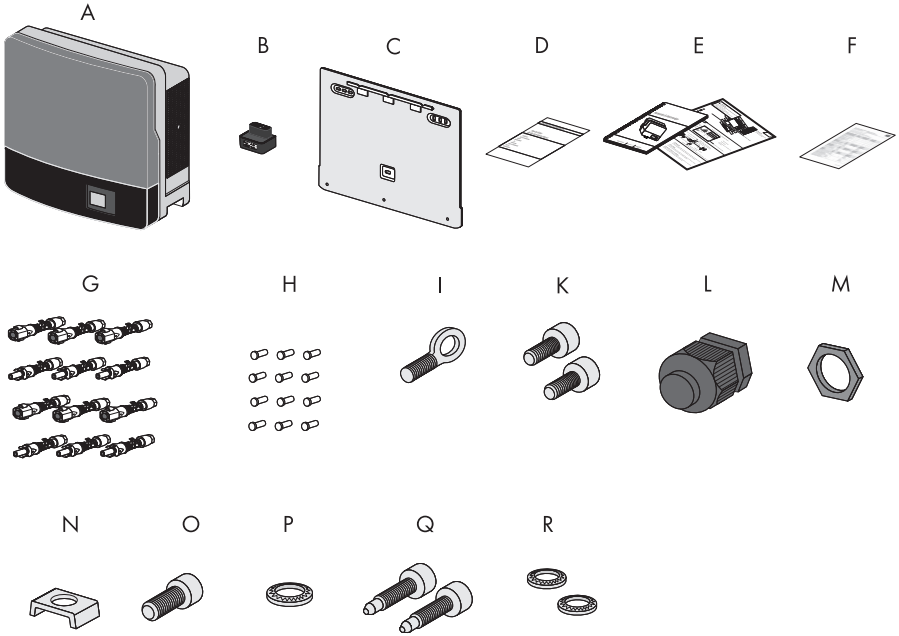

Object	Quantity	Description
A	1	Sunny Tripower
B	1	Electronic Solar Switch (ESS)
C	1	Rear panel (wall mounting bracket)
D	1	Set of documents with explanations and certificates
E	1	Installation manual, including user manual
F	1	Supplementary sheet with inverter default settings
–	1	Installation manual for RS485 communication module (optional)

Object	Quantity	Description
G	10/12	DC connector Sunny Tripower 8000TL/10000TL/12000TL: 10 units (5 x positive, 5 x negative) Sunny Tripower 15000TL / 17000TL: 12 each (6 x positive, 6 x negative)
H	10/12	Sealing plug Sunny Tripower 8000TL/10000TL/12000TL: 10 each Sunny Tripower 15000TL/17000TL: 12 each
I	1	Eye bolt (M8) for fastening the Sunny Tripower to the rear panel
K	2	Cylinder screws (M5x10) for fastening the enclosure to the rear panel
L	1	Cable gland for AC connection
M	1	Counter nut for cable gland at AC connection
N	1	Clamping bracket (M6) for additional earthing
O	1	Cheese-head screw (M6) for earth terminal
P	1	Conical spring washer (M6) for earth terminal
Q	2	Cheese-head screws (M5x20) for upper enclosure lid (spares)
R	2	Conical spring washers (M5) for enclosure lid screws (spares)

4.2 Identifying the Inverter

You can identify the inverter by the type label. The type label is located on the right-hand side of the enclosure.

The inverter serial number (Serial No.), the type (Type/Model) and other device-specific characteristics are specified on the type label.

5 Mounting

5.1 Safety

⚠ DANGER

Danger to life due to fire or explosion

Despite careful construction, electrical devices can cause fires.

- Do not mount the inverter on flammable construction materials.
- Do not mount the inverter in areas where highly flammable materials are stored.
- Do not mount the inverter in a potentially explosive atmosphere.

⚠ CAUTION

Risk of injury due to the heavy weight of the inverter (approx. 65 kg)

- Take the weight of the inverter into account during transport.
- Select a suitable mounting location and mounting surface.
- When mounting the rear panel, use fastening material suitable for the mounting surface.
- Two people are needed to mount the inverter.

⚠ CAUTION

Risk of burns due to hot enclosure parts

- Mount the inverter in such a way that it cannot be touched inadvertently.

5.2 Selecting the Mounting Location

Take the following requirements into consideration when selecting the mounting location:

- The mounting method and location must be suitable for the weight and size of the inverter (see Section 14 "Technical Data", page 95).

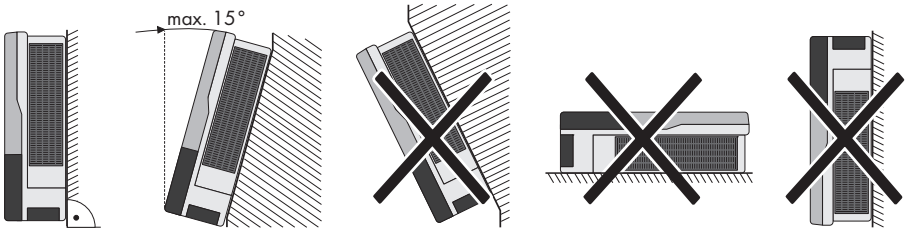

- Mount on a solid surface.
- The mounting location must be clear and safely accessible at all times without the use of additional aids such as scaffolding or lifting platforms. If this is not the case, service work may be restricted.
- Mount vertically or tilted backwards by max. 15°.
- The connection area must point downwards.
- Never mount the device with a forward tilt.
- Never mount the device with a sideways tilt.
- Do not mount horizontally.
- Install the inverter at eye level. Given the weight of the device, this will facilitate disassembly for service work.
- The ambient temperature should be below 40°C to ensure optimum operation.
- Do not expose the inverter to direct solar irradiation as this could cause power derating due to overheating.
- In order to avoid audible vibrations in living areas, do not mount the unit on plasterboard walls or similar. When in operation, the inverter emits noise which may be perceived as annoying in living areas.

- Observe the recommended clearances to walls, other inverters or other objects, as shown in the diagram. That ensures sufficient heat dissipation and gives you enough space to unplug the Electronic Solar Switch.
- If multiple inverters are mounted in areas with high ambient temperatures, allow more than the recommended clearances between the inverters and ensure an adequate fresh-air supply. This will prevent the inverter from reducing its power as a result of high temperatures (details on temperature derating can be found in the Technical Information "Temperature Derating" at www.SMA.de/en).

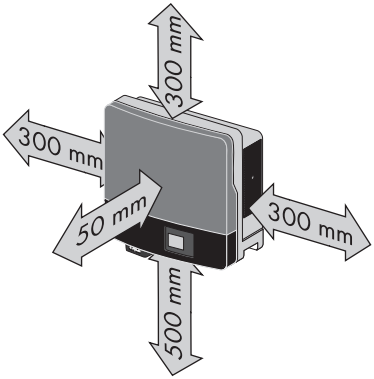

5.3 Mounting the Inverter with Rear Panel

1. Use the rear panel as a drilling template and mark the positions of the drill holes.

637.6 mm
85 mm
20 mm (7x)
11 mm (7x)
440.6 mm
618.8 mm
203.2 mm (8 in.)
203.2 mm (8 in.)
228.6 mm (9 in.)
228.6 mm (9 in.)
260 mm
260 mm
425 mm
Display
647.7 mm

2. Mount the rear panel.

   To do this, use one upper hole on the right and one on the left plus the hole in the middle.

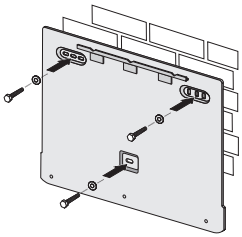

3. Hook the inverter into the rear panel, ensuring that the inverter enclosure is positioned flush against the rear panel.
   - For two people to transport the inverter, hold the inverter by the recessed grips at the bottom and the top edge of the enclosure lid.
   - For transport by crane, you can attach 2 ring bolts to the top of the inverter (see A: M10, diameter = 10 mm). To do this, remove the filler-plugs and screw in the ring bolts as far as they will go.
4. Remove the ring bolts after transport and re-attach the filler-plugs.

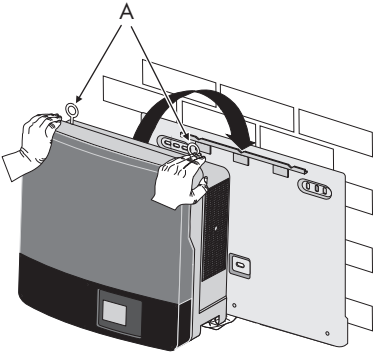

5. Release all 6 captive screws of the lower enclosure lid.

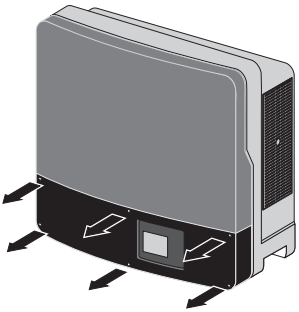

6. To remove the lower enclosure lid, lift it from the bottom.

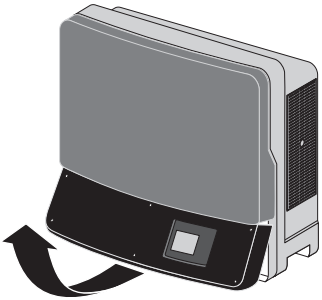

7. Screw the supplied eye bolt into the hole provided in order to secure the enclosure from being dislodged. The eye bolt only needs to be fastened hand-tight.

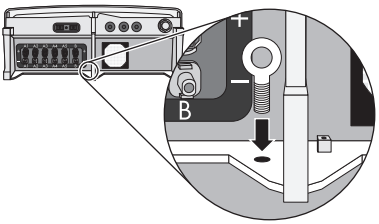

8. In order to secure the enclosure on the rear panel, fasten it at the bottom with the two M5x10 cheese-head screws supplied (torque: max. 3.5 Nm).

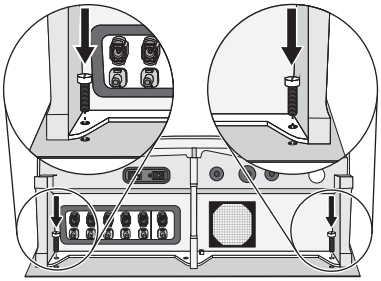

9. Check to ensure that the inverter is securely in place.

☑ The inverter is now securely mounted to the wall.

If the inverter is not to be connected immediately, re-attach the lower enclosure lid:

– Dock the lower enclosure lid at an angle and attach. The captive screws must protrude.

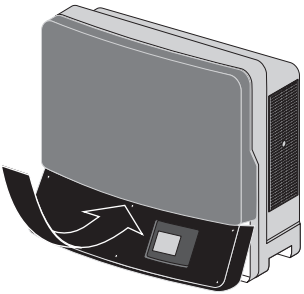

– Pre-fasten all six screws and then tighten them in the sequence shown on the right (torque: 2.0 Nm).

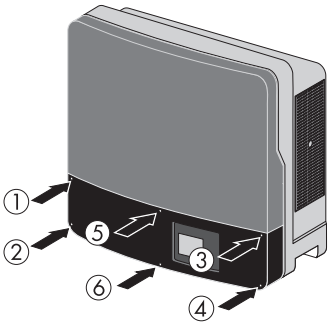

Optional Anti-Theft Protection

To protect the inverter from theft, you can secure it to the rear panel with a padlock.

The padlock must meet the following requirements:

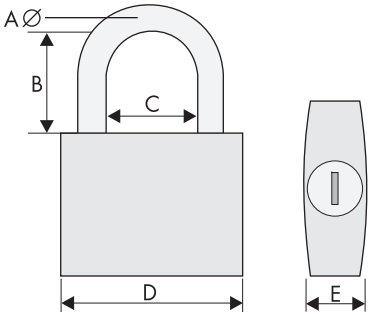

- Size:

  A: 6 mm ... 8 mm diameter

  B: 23 mm ... 29 mm

  C: 23 mm ... 28 mm

  D: 39 mm ... 50 mm

  E: 13 mm ... 18 mm
- Stainless
- Hardened shackle
- Protected lock cylinder

Storage of the key

Keep the key in a safe place in case it is needed for service purposes.

1. Put the shackle of the padlock through the eye of the previously mounted eye bolt and close the padlock.

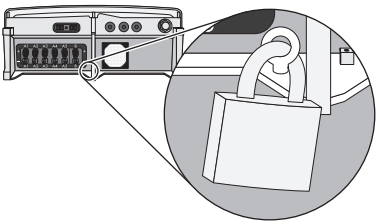

☑ The inverter is now protected against theft.

6 Electrical Connection

6.1 Safety

NOTICE

Electrostatic discharge can damage the inverter

Internal components of the inverter can be irreparably damaged by electrostatic discharge.

- Earth yourself before touching any components.

6.2 Overview of the Connection Area

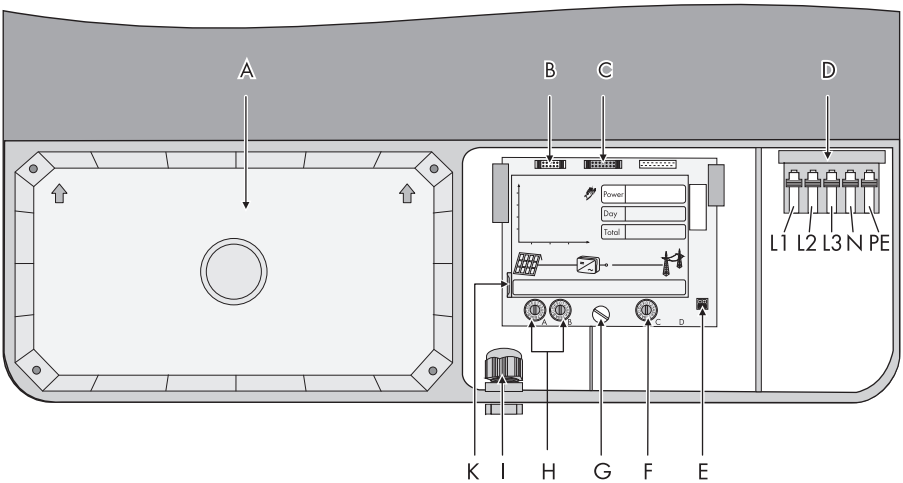

Object	Description
A	DC lid (slots for surge arresters and varistors are located here)
B	Plug for connecting the multi-function relay
C	Plug for connecting the RS485 communication module (optional)
D	Terminal for grid connection
E	Jumper for setting the language to English
F	Rotary switch for setting the *Bluetooth* NetID
G	Screw for releasing and raising the display
H	Rotary switches for setting the country standard and display language
I	Cable entry for the multi-function relay (M20, 5 mm ... 13 mm)
K	Slot for SD card (for service purposes only)

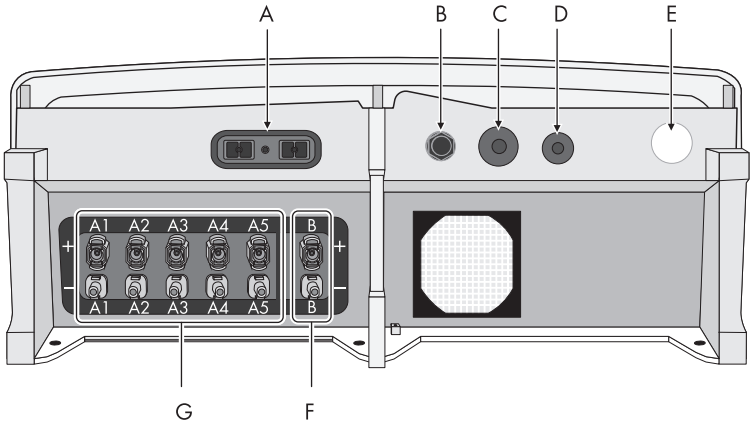

Object	Description
A	Electronic Solar Switch (ESS) socket
B	Cable entry for the multi-function relay (M20, 5 mm ... 13 mm)
C	Cable entries for communication via RS485 (M32) (optional)
D	Additional cable entry (M20)
E	Cable entry for grid connection (AC) (M32, 14 mm ... 25 mm)
F	DC connectors for connecting the strings (input area B)
G	DC connectors for connecting the strings (input area A) (for Sunny Tripower 8000TL/10000TL/12000TL only 4 each)

6.3 Connecting the Electricity Grid (AC)

6.3.1 Conditions for the AC Connection

You must comply with the connection requirements of your network operator.

Residual current device

The inverter is equipped with an integrated all-pole-sensitive residual-current monitoring unit.
The inverter can automatically differentiate between residual currents and normal leading leakage currents.

If an external RCD or residual-current device is strictly required, you must use a switch that trips at a residual current of 100 mA or higher.

You will find further information on using an RCD in the Technical Information "Criteria for Selecting a Residual-Current Device" at www.SMA.de/en.

Cable Dimensioning

The cable must be dimensioned in accordance with any local and national directives on cable dimensions which specify requirements for the minimum conductor cross-section. Cable dimensioning factors are e.g.: nominal AC current, type of cable, type of routing, cable bundling, ambient temperature and maximum specified line losses (for calculation of line losses, see design software "Sunny Design" with software version 2.0 or higher at www.SMA-Solar.com).

Cable Requirements

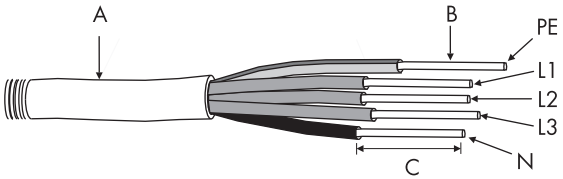

Position	Description	Value
A	Cable diameter	14 mm ... 25 mm
B	Conductor cross-section	1.5 mm² ... 16 mm², with bootlace ferrule maximum 10 mm²
C	Stripping length	approx. 12 mm
The PE wire must be 5 mm longer than the L and N wires.		

Connection of a second protective conductor

In some installation countries, a second protective conductor is required in order to prevent a contact current in the event of failure of the original protective conductor.

For installation countries falling within the scope of validity of the IEC standard 62109, the following requirements are applicable:

- Installation of protective conductor at the AC terminal with a conductor cross-section of at least 10 mm² Cu.

or

- Installation of a second protective conductor at the earth terminal with the same cross-section as the original protective conductor at the AC terminal (see Section 6.3.3 "Connecting the Second Protective Conductor", page 33).

You must always observe the applicable regulations in the country of installation.

Load disconnection unit

You must install a **separate** miniature circuit-breaker for each inverter in order to ensure that the inverter can be securely disconnected under load. You should use a 3-pole miniature circuit-breaker. If you are using a 1-pole miniature circuit-breaker, a residual voltage from the inverter may be present on the relevant cable after disconnection (maximum permissible fuse protection (see Section 14 "Technical Data", page 95)).

⚠ DANGER

Danger to life due to fire

When more than 1 inverter is connected in parallel to the same miniature circuit-breaker, the protective function of the miniature circuit-breaker is no longer guaranteed. This could result in a cable fire or destruction of the inverter.

- Never connect several inverters to a single miniature circuit-breaker.
- Observe the maximum permissible fuse protection of the inverter when selecting the miniature circuit-breaker.

⚠ DANGER

Danger to life due to fire

When a generator (inverter) and a load are connected to the same miniature circuit-breaker, the protective function of the miniature circuit-breaker is no longer guaranteed. The currents from the inverter and the electricity grid can accumulate to form overcurrents which are not detected by the miniature circuit-breaker.

- Never connect loads between the inverter and the miniature circuit-breaker without fuse protection.
- Always protect loads separately.

NOTICE

Damage to the inverter by use of screw-type fuses as switch-disconnectors

A screw-type fuse, e.g. DIAZED fuse or NEOZED fuse, is not a switch-disconnector and thus **may not be used** as a load disconnection unit. A screw-type fuse only acts as cable protection.

If the inverter is disconnected under load using a screw-type fuse, the inverter may be damaged.

- Use only a switch-disconnector or a miniature circuit-breaker as a load disconnection unit.

6.3.2 AC Connection Procedure

1. Check the line voltage and compare it with the permissible voltage range (see Section 14 "Technical Data", page 95).
2. Disconnect the miniature circuit-breaker from all three phases and secure against reconnection.
3. Release all 6 captive screws of the lower enclosure lid.

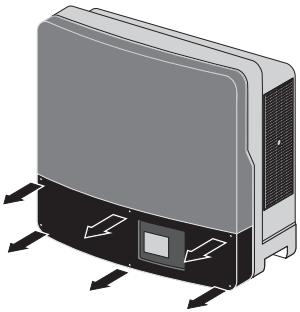

4. To remove the lower enclosure lid, lift it from the bottom.

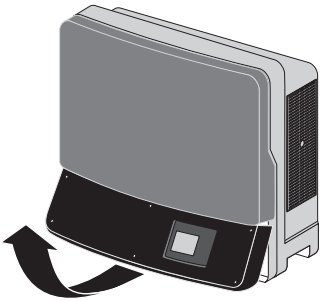

5. Check that the country setting of the inverter is correct using the supplementary sheet provided with the default settings.

If the inverter is not set to the desired country standard, adjust the country standard by means of the rotary switches (see Section 6.5.3 "Setting the Country Standard and Language using the Rotary Switch", page 52).

6. Remove the adhesive tape from the AC enclosure opening.
7. Insert the AC cable gland from the outside into the cable entry and tighten it from the inside with the counter nut.

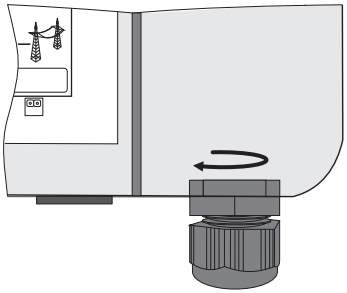

8. Pull the cable through.
9. Raise the terminals of the AC clamp terminal as far as they will go.

NOTICE

Risk of fire if 2 conductors are connected

If 2 conductors are connected to one terminal, a poor electrical contact may present a risk of overheating or fire.

- Never connect more than one conductor per terminal.

10. Connect L1, L2, L3, N and the protective conductor (PE) to the AC terminal in accordance with the labelling.
    - The PE conductor must be 5 mm longer than the L and N conductors.
    - L and N must not be swapped.
    - The direction of rotation of L1, L2 and L3 is not relevant.

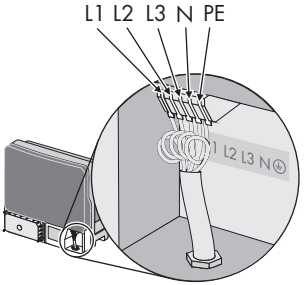

⚠ CAUTION

Danger of crushing when terminals snap shut

The terminals close by snapping down fast and hard.

- Press the terminals down with your thumb, do not grip the sides of the terminal between fingers and thumb.
- Keep fingers away from the terminals.

11. Close all terminals of the AC terminal until they snap into place.

12. Screw the cap nut of the cable gland down tightly on the cable entry.

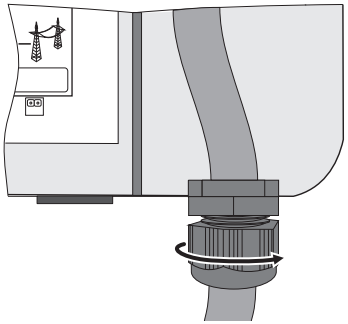

⚠ DANGER

Danger to life due to high voltages in the inverter

- Do not switch on the miniature circuit-breaker until the PV array has been connected and the inverter is securely closed.

6.3.3 Connecting the Second Protective Conductor

If required by the installation, the earth terminal can be used to connect a second protective conductor or as equipotential bonding.

Procedure

1. Take the clamping bracket, cheese-head screw M6 and conical spring washer M6 out of the accessory kit.
2. Insert the stripped earthing cable (D) under the clamping bracket (C) (cross-section: max. 16 mm²).
3. Screw the terminal (C) tight with the screw (A). The toothing of the conical spring washer (B) must face toward the clamping bracket.

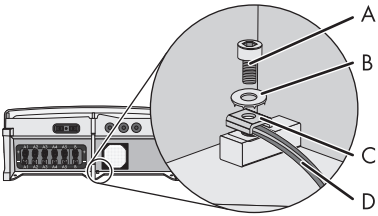

6.4 Connecting the PV Array (DC)

6.4.1 Conditions for DC Connection

The inverter has two input areas "A" and "B", each with its own MPP tracker.

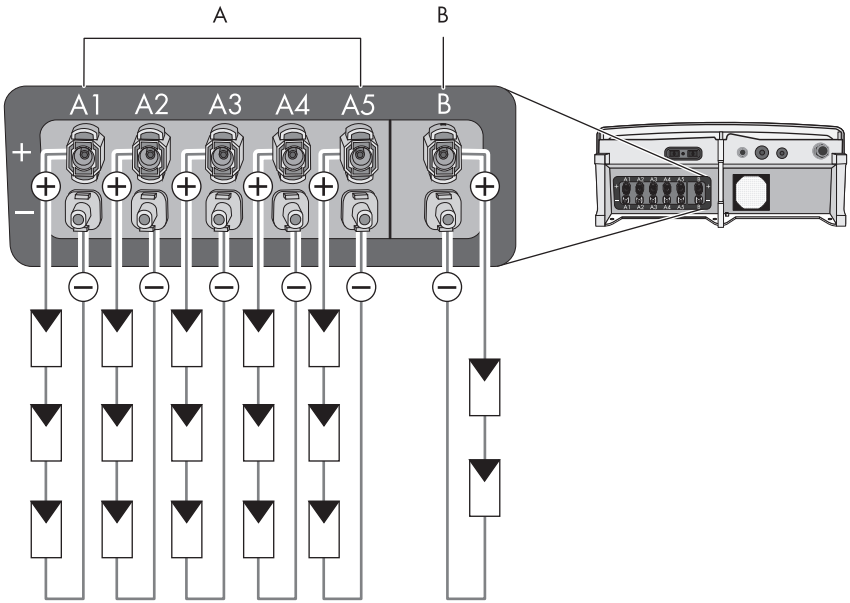

Up to 4 strings (Sunny Tripower 8000TL/10000TL/12000TL) or 5 strings (Sunny Tripower 15000TL/17000TL) can be connected at input area A. One string can be connected at input area B.

- For input area A, the PV modules must meet the following requirements:
  - same type
  - same number of in-series-connected PV modules
  - identical alignment
  - identical tilt
- For the activation of the intelligent string failure detection, the PV modules at input A and B must be identically aligned.
- The connecting cables of the PV modules must be equipped with connectors. The connectors required for DC connection are included in the scope of delivery.

Use of Y adaptors for the parallel connection of strings

Y adaptors must not be visible or freely accessible in close proximity to the inverter.

- The DC electric circuit must not be interrupted by Y adaptors.
- Observe the procedure for disconnecting the inverter (see Section 9 "Disconnecting the Inverter from Voltage Sources", page 63).

- The following thresholds at the DC input of the inverter must not be exceeded:

Sunny Tripower	Maximum input voltage (DC)	Maximum input current (MPP) (DC)	Maximum short-circuit current per string input (DC)
		Input area A/B	A1 ... A5 / B
8000TL	1,000 V	22.0 A / 11.0 A	33 A / 12.5 A
10000TL	1,000 V	22.0 A / 11.0 A	33 A / 12.5 A
12000TL	1,000 V	22.0 A / 11.0 A	33 A / 12.5 A
15000TL	1,000 V	33.0 A / 11.0 A	40 A / 12.5 A
17000TL	1,000 V	33.0 A / 11.0 A	40 A / 12.5 A

WARNING

Risk of fire as a result of overcurrent on the string input

Destruction of the inverter

Since the electronic string fuse shorts the PV array in the event of a fault, the thresholds for the maximum short-circuit current per string input given in the table above must not be exceeded.
If a string input is overloaded, it can result in an electric arc and hence a risk of fire.

- Make sure that the thresholds specified in the table above are not exceeded.
- Check whether the short-circuit currents of the connected PV modules are in compliance with the thresholds given in the table above.

Function of the electronic string fuse

The electronic string fuse prevents reverse currents in the PV array. Activation of the electronic string fuse is only possible if the following conditions are met:

- During installation, the DC input voltage must be at least 188 V (see Section 14 "Technical Data", page 95) in order to activate the protective function of the integrated electronic string fuse. Otherwise, a reversed polarity at the DC connection or a defective string will not be recognized by the inverter.

NOTICE

Risk of fire in the PV array due to non-recognition of reverse currents

The integrated electronic string fuse monitors the PV array and protects it against dangerous reverse currents. In order to activate the electronic string fuse, you must observe the following during connection of the strings:

- If more than 2 strings are connected to the inverter, **ALWAYS connect the first string to input B**. If no string is connected at input B, the string fuse will not be active.
- Each string must be clearly assigned to the correct string input. Do not cross-wire or bundle the string cables. See the diagram in Section 6.4.1 for the correct assignment of the strings.

Use of external string collection boxes

If string collection boxes are used, the functionality of the electronic string fuse may be limited.

6.4.2 Assembling the DC Connectors

For connection to the inverter, all connection cables of the PV modules must be equipped with the DC connectors provided.

Assemble the DC connectors as follows. Be sure to observe the correct polarity. The DC connectors are marked with the symbols "+" and "–".

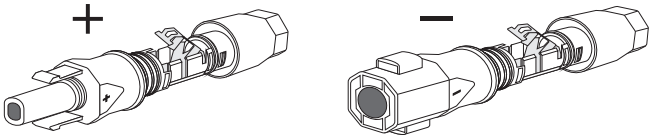

Cable Requirements

- Use a PV1-F cable.

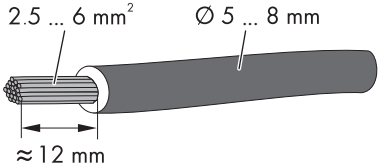

Procedure

1. Lead the stripped cable all the way into the plug.

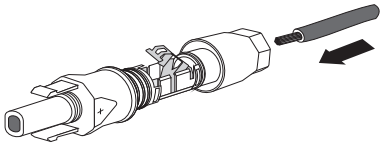

2. Push the clamping bracket down.
   ☑ The clamping bracket clicks audibly into place.

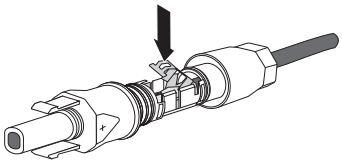

3. Ensure that the cable is correctly positioned:

Result	Measure
☑ If the stranded wire is visible in the chamber of the clamping bracket, the cable is correctly positioned. 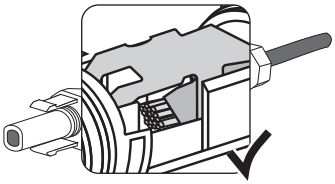	• Proceed to step 4.
☑ If the stranded wire is **not** visible in the chamber, the cable is not correctly positioned. 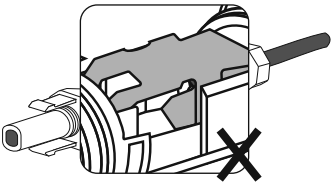	• Release the clamping bracket. To do so, insert a 3.5 mm screwdriver into the clamping bracket and lever it open. 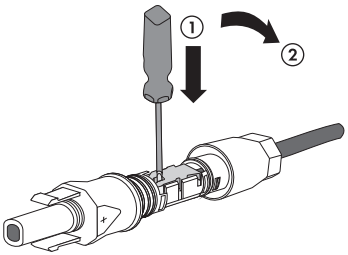 • Remove the cable and go back to step 1.

4. Push the swivel nut up to the thread and tighten (torque: 2.0 Nm).

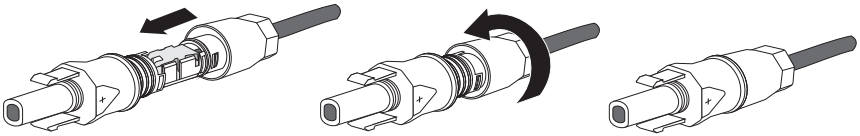

☑ The DC connectors are assembled and ready for connection to the inverter (see Section 6.4.4 "Connecting the PV Array (DC)", page 40).

6.4.3 Opening the DC Connector

1. Unscrew the swivel nut.

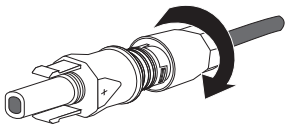

2. To release the DC connector: Insert a 3.5 mm screwdriver into the snap slot on the side and lever it open.

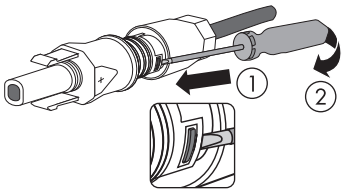

3. Carefully pull the DC connector apart.

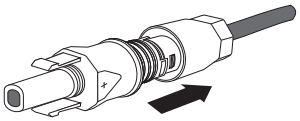

4. Release the clamping bracket. To do this, use a 3.5 mm screwdriver.

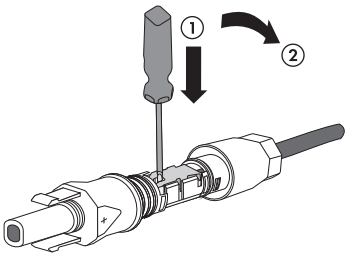

5. Remove the cable.

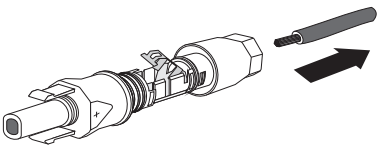

☑ The cable is now detached from the DC connector.

6.4.4 Connecting the PV Array (DC)

⚠ DANGER

Danger to life due to high voltages in the inverter

- Before connecting the PV array, ensure that the AC miniature circuit-breaker is switched off for all 3 phases.

⚠ WARNING

Risk of electric arc if the DC connectors are pulled out while the Sunny Tripower is beeping

The integrated electronic string fuse monitors the PV array. In case of incorrect installation (e.g. reverse polarity) or a faulty string, the electronic string fuse short-circuits the PV array and the Sunny Tripower starts to beep.

- Do **NOT** pull the DC connector out as this could trip an electric arc.
- Do **NOT** pull out the Electronic Solar Switch as otherwise the entire reverse current will flow through the defective string which could result in a fire.
- Further procedure (see Section 12.1 "Sunny Tripower is Beeping", page 84).

NOTICE

Destruction of the inverter due to overvoltage

If the voltage of the PV modules exceeds the maximum input voltage of the inverter, it could be destroyed by overvoltage. This will void all warranty claims.

- Do not connect any strings to the inverter which have an open-circuit voltage greater than the maximum input voltage of the inverter.
- Check the plant design.

NOTICE

Excessive voltages can destroy the multimeter

- Only use multimeters with a DC input voltage range up to at least 1,000 V.

1. Check the connection cables of the PV modules for correct polarity and make sure that the maximum input voltage of the inverter is not exceeded.

   At an ambient temperature over 10°C, the open-circuit voltage of the PV modules should not exceed 90% of the maximum input voltage of the inverter. If this is not the case, review the plant design and the PV module circuitry.

   Otherwise, the maximum inverter input voltage may be exceeded at low ambient temperatures.

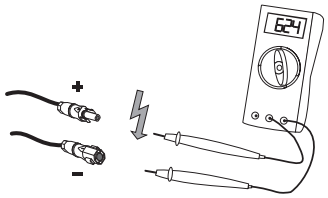

2. Check strings for earth faults (see Section 12.2 "Checking the PV Array for Earth Faults", page 85).

3. Check the Electronic Solar Switch for wear, as described in Section 10.3. Providing it is in perfect condition, plug the Electronic Solar Switch in right up to the stop. The Electronic Solar Switch must be aligned parallel to and flush with the enclosure.

   Only plug the Electronic Solar Switch during installation when the enclosure lid is open. This is necessary in order to activate the protective function of the integrated electronic string fuse.

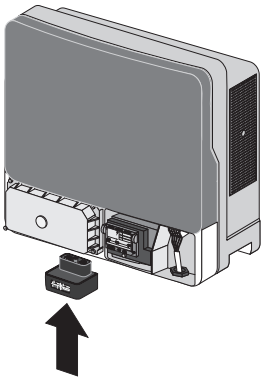

NOTICE

Risk of fire in the PV array due to non-recognition of reverse currents

The integrated electronic string fuse monitors the PV array and protects it against dangerous reverse currents. In order to activate the electronic string fuse, you must observe the following during connection of the strings:

- If more than 2 strings are connected to the inverter, **ALWAYS connect the first string to input B**. If no string is connected at input B, the string fuse will not be active.
- Each string must be clearly assigned to the correct string input. Do not cross-wire or bundle the string cables. See the diagram in Section 6.4.1 for the correct assignment of the strings.

Use of external string collection boxes

If string collection boxes are used, the functionality of the electronic string fuse may be limited.

4. If more than 2 strings are to be connected, check the first assembled DC connector to ensure correct polarity and connect to input B of the inverter.

   ☑ The DC connector clicks audibly into place.
   To release the DC connector (see Section 6.4.3 "Opening the DC Connector", page 39).

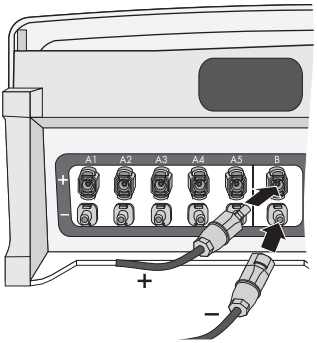

5. After connecting the string, watch out for messages in the display and any acoustic signals.

   Only continue if the following conditions are fulfilled:

   – The green LED is glowing or flashing.
   – There is NO acoustic signal after 30 seconds.
   – NONE of the error messages 40, 64 or 82 are shown in the display.

   Otherwise follow the relevant instructions in the following table:

Event	Measure
After 60 seconds, the display is blank and the Sunny Tripower is not beeping although the DC input voltage is over 188 V.	There is a fault in the Sunny Tripower. • Ensure that the DC cables have not been reverse poled. • Ensure that DC input voltage of over 188 V is present. • Contact the SMA Service Line (see Section 16 "Contact", page 126)

Event	Measure
The Sunny Tripower starts beeping.	The Sunny Tripower short-circuits the PV array. • **On no account** disconnect the Electronic Solar Switch or the DC connectors. Wait until the Sunny Tripower stops beeping (after dark). Pulling the DC connectors causes a risk of arcing, since the Sunny Tripower short-circuits the PV array in order to prevent reverse currents through individual strings. Depending on the level of irradiation, this could trigger current flows. However, the PV array and the Sunny Tripower are in a safe state. • Before leaving the Sunny Tripower, install a contact barrier (e.g., fence) and moisture protection (e.g., tarpaulin). • Wait until dark before pulling out the Electronic Solar Switch and all DC connectors, and only then eliminate any errors (reversed pole or defective string).
The display is showing the error message 40, 64 or 82.	• Follow the instructions on the display (see Section 11.2 "Error messages", page 74).

6. Follow the same procedure to connect all further strings.

   It is no longer necessary to wait 60 seconds.

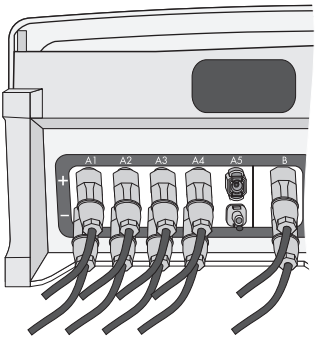

7. Ensure that all DC connectors are securely in place.

Number of Strings - Sunny Tripower 8000TL / 1000TL / 12000TL

The Sunny Tripower 8000TL / 10000TL / 12000TL have only 4 strings at input A.

8. In order to seal the inverter, all DC inputs that are not required have to be closed as follows:
   - Insert the sealing plugs provided into the DC connectors that are not required. Do **not** insert sealing plugs into the DC inputs on the inverter.

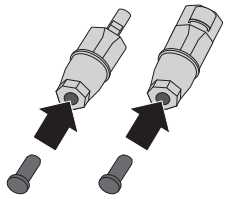

   - Insert the DC connectors with sealing plugs into the corresponding DC inputs on the inverter.

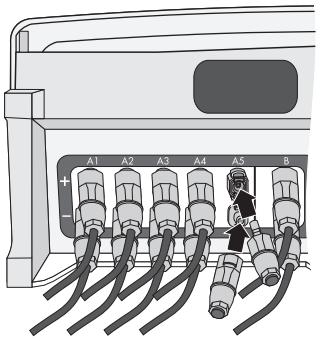

9. If the Sunny Tripower does not beep or display an error message, disconnect the Electronic Solar Switch.

   ☑ The display switches off.

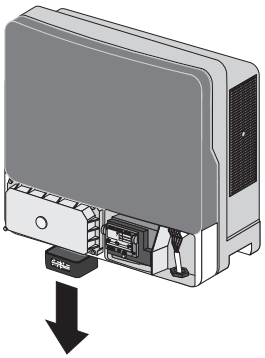

☑ You can now commission the inverter (see Section 7 "Commissioning", page 58). The following connections and settings are optional.

6.5 Setting the Country Standard and Display Language

The inverter can be configured for various countries. This is carried out via the two rotary switches in the inverter prior to commissioning, or by configuring the "CntrySet" or "Set country standard" parameter via a communication product (z. B. Sunny WebBox or Sunny Explorer) once you have commissioned the inverter.

The switch position 0/0 indicates the state upon delivery. If you have ordered the inverter with specific country settings, they will have already been preset at the factory via a communication product. In this case, you will not be able to recognise the current setting by the switch position. If changes are made via the rotary switches or via a communication product, the default grid parameters are overwritten. They cannot be restored, and must be re-entered via a communication product. The display language can be changed at any time using the rotary switches, independent of the grid parameters. This means that the default grid parameters remain unchanged, but the display messages are shown in the set language. For devices ordered without any specified country of installation, the standard setting is "VDE0126-1-1" and the language is German.

Changes will be accepted immediately after switching the miniature circuit-breaker on. If a non-programmed switch setting is selected, the inverter issues an error message on the display and the last valid setting is retained.

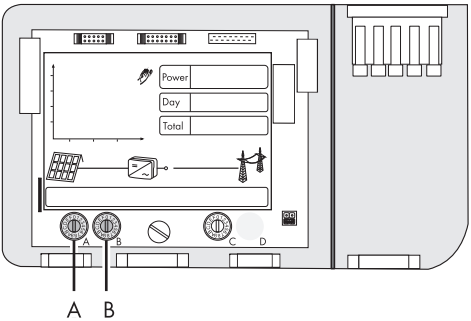

SMA Grid Guard-Protected Country Data Sets

In some countries, the local connection conditions demand a mechanism which prevents the feed-in parameters from being changed. Therefore, some country data sets are protected and can only be unlocked with a personal access code, the SMA Grid Guard code.

SMA Grid Guard protected country data sets are automatically blocked for 10 feed-in hours after commissioning, or after the last alteration. If the country data set is changed after these 10 feed-in hours, the inverter will not accept the changes and display the error message "Grid parameter locked". If, however, a later change to the country data set only relates to a change of the display language via the rotary switches in the inverter, this change is immediately applied.

It is also possible to configure country data sets (parameter "CntrySet" or "Set country standard"), and to lock or unlock these manually via a communication product. To lock a data set, enter the digit sequence "54321" instead of the password in the SMA Grid Guard code field. The data set can only be unlocked by entering a personal, 10-digit SMA Grid Guard code which is valid for a maximum of 10 feed-in hours. The application form for the personal access code is available at www.SMA.de/en, in the "Certificate" category of the respective inverter. The language can be configured without a password, regardless of the country data set.

Changing parameters in SMA Grid Guard-protected country data sets

If the parameters within protected country data sets are changed, these are no longer protected and instead of the standard, "ADJ" or "Special setting" is displayed. In this case, a change to parameters is not locked automatically after 10 feed-in hours, but has to be locked manually. To manually lock the parameters, set the SMA Grid Guard Code to "54321".

Further information on parameter settings

You will find information on making adjustments and changing parameters in the user manual for your software.

The last change (executed via rotary switch or communication product) is always verified and activated if applicable. Consequently, the switch position may not necessarily show the actual country setting.

6.5.1 Checking the Country Standard

Check whether the inverter is set to the country of installation.

Before commissioning:

- Check that the country standard of the inverter is correct by comparing the default settings of the inverter listed on the supplementary sheet provided.

After commissioning:

- Check that the country standard is correct by checking the display message during (re-)commissioning (see Section 7 "Commissioning", page 58).

  or

- Check that the country standard is correct using the "SMA grid guard" measuring channel via a communication product.

Display language

Once you have set the country standard, you can always set the display language later using rotary switch B. However, you have to then set rotary switch A to "0" in order to keep the country data set.

The settings of each country data set are specified in the operating parameters. The parameters can be read out using a communication product. The description of the operating parameters is available at www.SMA.de/en in the category "Technical Description" of the respective inverter.

(A)	(B)	Country data set	Display language	Grid Guard protection	Country
0	0	default settings	default settings	dependent on parameter set	dependent on parameter set
0	1	retained	English	dependent on parameter set	dependent on parameter set
0	2	retained	German	dependent on parameter set	dependent on parameter set
0	3	retained	French	dependent on parameter set	dependent on parameter set
0	4	retained	Spanish	dependent on parameter set	dependent on parameter set
0	5	retained	Italian	dependent on parameter set	dependent on parameter set
0	6	retained	not assigned*	dependent on parameter set	dependent on parameter set

(A)	(B)	Country data set	Display language	Grid Guard protection	Country
0	7	retained	not assigned*	dependent on parameter set	dependent on parameter set
1	2	VDE-AR-N4105[a)]	German	yes	Germany
1	4	VDE-AR-N4105-MP[b)]	German	yes	Germany
1	6	VDE-AR-N4105-HP[c)]	German	yes	Germany
1	0	VDE0126-1-1	German	yes	Germany, Switzerland
1	8	VDE0126-1-1	French	yes	Switzerland, France
1	9	VDE0126-1-1/UTE[d)]	French	yes	France
2	0	VDE0126-1-1	Italian	yes	Switzerland
2	8	AS4777.3	English	no	Australia
3	2	CEI0-21Ext[e)]	Italian	no	Italy
4	0	RD1663-A	Spanish	yes	Spain
4	1	RD1663/661	Spanish	yes	Spain
4	8	PPC	not assigned*	no	Greece
4	9	PPC	English	no	Greece
5	1	KEMCO 501/2009	English	no	South Korea
5	8	G83	English	no	England
5	A	G59/2	English	no	England
6	0	EN50438	German	yes	various EU countries
6	1	EN50438	English	yes	
6	2	EN50438	French	yes	
6	3	EN50438	Italian	yes	
6	4	EN50438	Spanish	yes	
6	5	EN50438	not assigned*	yes	
6	6	EN50438	not assigned*	yes	
7	4	PPDS	not assigned*	yes	Czech Republic
7	5	PPDS	English	yes	Czech Republic

(A)	(B)	Country data set	Display language	Grid Guard protection	Country
7	6	PPDS	German	yes	Czech Republic
7	8	C10/11	French	yes	Belgium
7	9	C10/11	English	yes	Belgium
7	A	C10/11	German	yes	Belgium
A	0	MVtg-Directive	German	yes	Germany
A	1	MVtg-Directive	English	yes	flexible
A	2	MVtg-Directive	French	yes	France
A	3	MVtg-Directive	Spanish	yes	Spain
A	4	MVtg-Directive	not assigned*	yes	Czech Republic
A	8	CN/CGC/ GF001:2009**	English	no	China
A	C	SI 4777	English	yes	Israel
B	0	MVtg-Directive int	German	yes	Germany
B	1	MVtg-Directive int	English	yes	flexible
B	2	MVtg-Directive int	French	yes	France
B	3	MVtg-Directive int	Spanish	yes	Spain
B	4	MVtg-Directive int	not assigned*	yes	Czech Republic
C	0	Customer	English	no	flexible
C	1	Customer	German	no	flexible
C	2	Customer	French	no	flexible
C	3	Customer	Spanish	no	flexible
C	4	Customer	Italian	no	flexible
C	5	Customer	not assigned*	no	flexible
C	6	Customer	not assigned*	no	flexible
D	0	Off-Grid60	English	no	flexible
D	1	Off-Grid60	German	no	flexible
D	2	Off-Grid60	French	no	flexible
D	3	Off-Grid60	Spanish	no	flexible
D	4	Off-Grid60	Italian	no	flexible

(A)	(B)	Country data set	Display language	Grid Guard protection	Country
D	5	Off-Grid60	not assigned*	no	flexible
D	6	Off-Grid60	not assigned*	no	flexible
E	0	Off-Grid50	English	no	flexible
E	1	Off-Grid50	German	no	flexible
E	2	Off-Grid50	French	no	flexible
E	3	Off-Grid50	Spanish	no	flexible
E	4	Off-Grid50	Italian	no	flexible
E	5	Off-Grid50	not assigned*	no	flexible
E	6	Off-Grid50	not assigned*	no	flexible
F	0	SD-Card	SD-Card	no	flexible

a) Configurable from Firmware Version 2.31. Setting in accordance with VDE-ARN-4105 (Germany) for PV plants < 3.68 kVA

b) Configurable from Firmware Version 2.31. Setting in accordance with VDE-ARN-4105 (Germany) for PV plants > 3.68 kVA and < 13.8 kVA

c) Configurable from Firmware Version 2.31. Setting in accordance with VDE-ARN-4105 (Germany) for PV plants > 13.8 kVA

d) Special setting: *Bluetooth* transmission power reduced (in accordance with French standards)

e) Configurable from Firmware Version 2.50. Setting according to CEI 0-21 for PV plants with external grid and plant protection > 6 kVA (Italy)

* Currently not assigned. The previously configured display language is maintained.

** Planned

If the inverter is not set to the country of installation, there are several ways of configuring the required country standard:

- Setting via the two rotary switches (see Section 6.5.3 "Setting the Country Standard and Language using the Rotary Switch", page 52).
- Alternatively, you can carry out the settings via the "CntrySet" or "Set country standard" parameters using a communication product, once you have commissioned the inverter.
- If you require adjusted parameter settings for your installation site, you can change these with the help of a communication product.

6.5.2 Extension of the Deactivation Limits

The deactivation criteria (voltage, frequency) are specified by the country parameters.

Sunny Tripower inverters have the additional country data set "MVtgDirective". This parameter expands the deactivation limits of the inverter for voltage and frequency to a maximum/minimum. This country setting may only be selected if the plant or the inverter is operated with external three-phase decoupling protection, which will automatically disconnect the inverter from the electricity grid if non-permissible voltage and frequency values occur. Device protection is still guaranteed.

⚠ DANGER

Danger to life due to electric shock if external decoupling protection is missing

With the country setting "MVtgDirective", the inverter may only be operated with an external three-phase decoupling protection device which complies with the country-specific requirements.

Without such external decoupling protection, the inverter will not disconnect from the electricity grid when the standard requirement is exceeded.

- Install external three-phase decoupling protection.

6.5.3 Setting the Country Standard and Language using the Rotary Switch

1. Disconnect the inverter (see Section 9 "Disconnecting the Inverter from Voltage Sources", page 63).
2. Set the arrows on the rotary switches (A and B) to the required position using a screwdriver (see Section 6.5.1 "Checking the Country Standard", page 47). Use a screwdriver with blade width 2.5 mm.

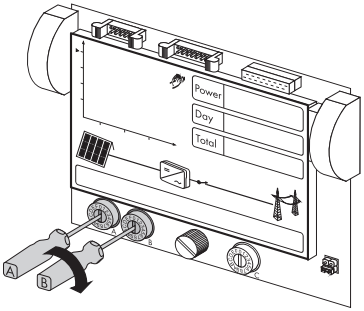

Jumper for English language

You can also adjust the language to English by means of a jumper (e.g. for service purposes).

- To do so, plug the jumper onto the upper two pins as shown on the right.

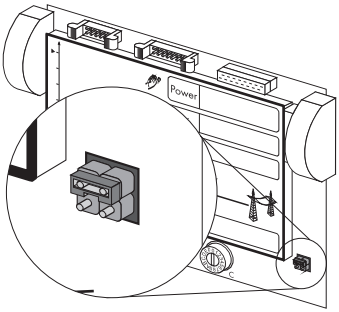

3. Restart the inverter (see Section 7 "Commissioning", page 58).

6.6 Communication

6.6.1 *Bluetooth*

Communication via *Bluetooth* with a communication product is activated by default. Networking with other inverters via *Bluetooth* is deactivated by default.

The following setting options are possible via a rotary switch:

Switch position (NetID)	Setting
0	Off
1	Communication via *Bluetooth* with communication product possible, no networking with other inverters (default setting)
2 ... F	Networking with other inverters

In order to restrict communication via *Bluetooth* between the inverters of your plant and those of neighbouring plants, you can assign an individual NetID to the inverters of your plant (switch position 2 ... F). However, this is only necessary if neighbouring plants are situated within a radius of 500 m.

So that all inverters in your plant are detected by your communication product, all inverters must have the same NetID.

Plant password for user and installer

If you are using *Bluetooth* communication, you can protect the inverter with a plant password for the user and a plant password for the installer. All inverters are delivered with the same default plant password. To protect the plant from unauthorized access, you must change plant passwords using a communication product.

If you are not using *Bluetooth* communication, deactivate it. This will protect your plant from unauthorized access.

Changing the plant time

If communication is effected via *Bluetooth* and Sunny Explorer, you must change the plant time (date and time) via a communication product after commissioning. This will prevent disturbances when retrieving saved events.

To do this, proceed as follows:

1. Disconnect the inverter (see Section 9 "Disconnecting the Inverter from Voltage Sources", page 63).
2. Set the arrow on the rotary switch (C) to the required position with a screwdriver. Use a screwdriver with blade width 2.5 mm.

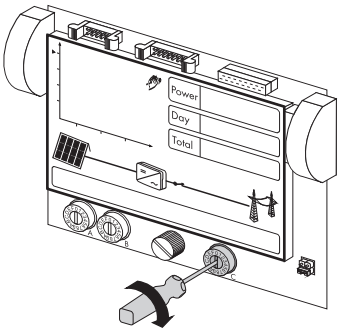

3. Restart the inverter (see Section 7 "Commissioning", page 58).

Activation of settings

The *Bluetooth* settings will only be activated after the miniature circuit-breaker has been switched on, the PV array connected and the Electronic Solar Switch plugged in.

6.7 Retrofitting a Surge Arrester Type II

The inverter can be equipped ex works with surge arresters, or they can be retrofitted at a later time. The order numbers for both retrofit kits (1 for input A only, 1 for input A and B) can be found in Section 15.

To carry out retrofitting, proceed as follows:

1. Disconnect the inverter (see Section 9 "Disconnecting the Inverter from Voltage Sources", page 63).

⚠ DANGER

Danger to life due to high voltages in the inverter

Death from electric shock

There is residual voltage in the inverter. The inverter takes 20 minutes to discharge.

- Wait 20 minutes before you open the upper enclosure lid or the DC lid.

2. Unscrew the captive screws of the DC lid on the left-hand side of the connection area.

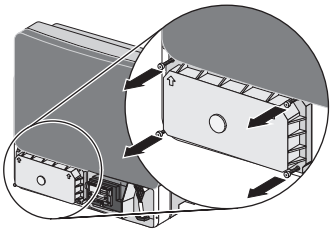

3. Lift the DC lid up from the bottom to remove it.

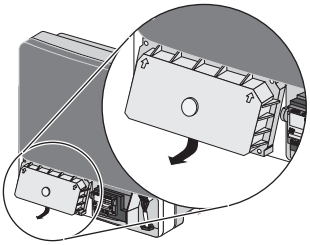

4. Plug all surge arresters into the slots provided until they snap into place with the side latches.

– The surge arrester marked "PE 500" must be inserted in the bottom slot.

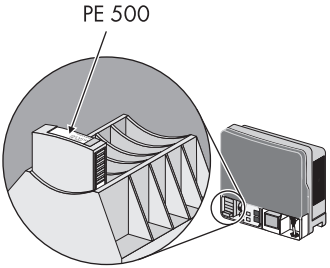

– If surge arresters are only required for input A, the two surge arresters must be mounted on the two upper slots.

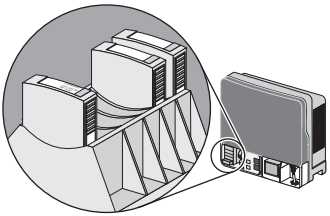

– If input B is also to be protected, surge arresters must be plugged into all slots.

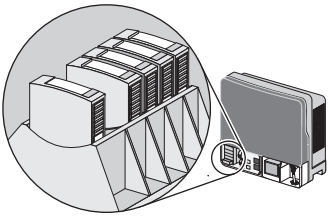

– A green strip in the window (A) indicates that the surge arrester is fully functional. A red strip in the window indicates that the surge arrester is faulty. In this case, a warning also appears in the display with the event number "83".

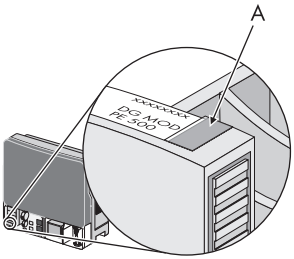

5. Dock the DC lid at an angle, and attach. The captive screws must protrude.

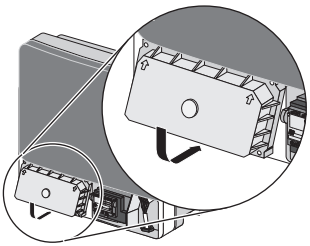

6. Pre-screw all 4 screws of the DC lid and then tighten them (torque: 3.5 Nm).

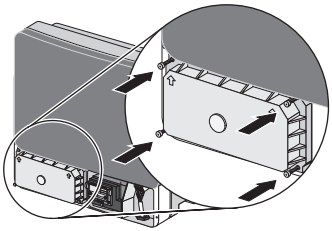

☑ The surge arresters are now installed and the inverter can be re-commissioned (see Section 7 "Commissioning", page 58).

7 Commissioning

7.1 Commissioning the Inverter

1. Check that the device is fixed securely to the wall (see Section 5 "Mounting", page 20).
2. Check that the country configuration is correct (see Section 6.5 "Setting the Country Standard and Display Language", page 45).
3. Check that the AC grid cable is connected correctly (see Section 6.3 "Connecting the Electricity Grid (AC)", page 29).
4. Check that the DC cables (PV strings) are connected correctly (see Section 6.4 "Connecting the PV Array (DC)", page 34).
5. Close unused DC inputs with the appropriate DC connectors and sealing plugs (see Section 6.4.4 "Connecting the PV Array (DC)", page 40).
6. Close all enclosure entries.
7. Dock the lower enclosure lid at an angle and attach. The captive screws must protrude.

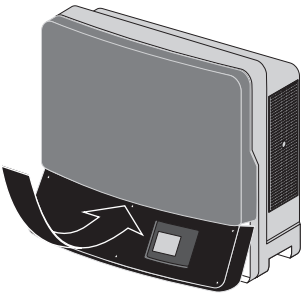

8. Pre-screw all six screws and then tighten them in the sequence shown on the right (torque: 2.0 Nm).

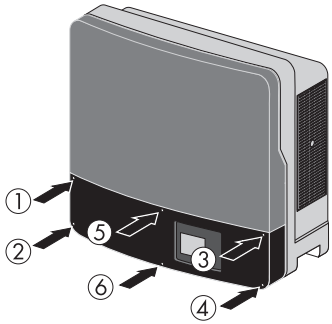

9. Plug the Electronic Solar Switch in firmly right up to the stop.

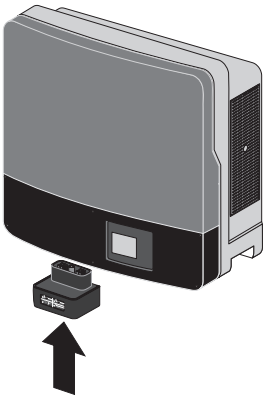

10. Switch on the miniature circuit-breaker.
11. If a multi-function relay is connected, switch on the supply voltage.
12. Check whether the display and LEDs are indicating a normal operating state.

LED	Colour	Meaning
A	Green	Glowing: operation
		Flashing: waiting for sufficient irradiation
B	Red	Disturbance
C	Blue	*Bluetooth* communication is active

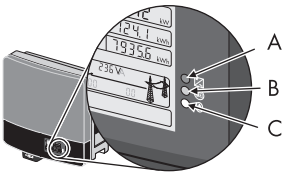

☑ If the inverter has been commissioned successfully, the green LED should be on or flashing, provided there is sufficient solar irradiation.

The significance of a glowing red LED and of the event numbers on the display is described in Section 11.2.

7.2 Display Messages during the Start Phase

Illustrated display messages

The display messages illustrated in this section serve as examples and, depending on the country setting, may differ from the actual display messages on your inverter.

- The firmware version of the internal processors appears first in the text line.

FW PACK xxxx HP xxxx

- After an interval of 5 seconds, or after tapping on the enclosure lid, the serial number (or designation) of the inverter and the NetID for communication via *Bluetooth* will appear. The designation of the inverter can be changed with a communication product.

SN 2110000552 XXXX

- After a further 5 seconds or a further tap, the configured country standard is displayed (example: "VDE0126-1-1").

VDE0 126-1-1

- After a further 5 seconds or another tap, the configured language is displayed (example: "Language English").

LANGUAGE ENGLISH

- During normal operation, the text line of the display will subsequently be blank. See Section 11 for event messages which may be displayed in the text line and their meaning.

Showing display messages again (valid from Firmware Version 2.33)

If you want to view the display messages of the start-up phase again during normal operation, tap the enclosure lid twice in quick succession.

8 Configuration

8.1 Changing the Plant Time and Plant Password

Requirements:

- A computer with *Bluetooth* interface must be available.
- Sunny Explorer with software version 1.04 or higher must be installed on the computer.
- The plant must be logged in Sunny Explorer.

1. Change the standard plant password (see Sunny Explorer help). This will protect your plant from unauthorized access.
2. Change the plant time (see Sunny Explorer help).

8.2 Activating and Setting SMA OptiTrac Global Peak

With partially shaded PV modules, you should activate SMA OptiTrac Global Peak and set the time interval in which the inverter will optimise the MPP of the PV plant.

Requirements:

- A communication product that is appropriate for the type of communication used must be available.

1. Access the user interface of the communication product and log in as an installer.
2. Select the parameter **Power limit of the OptiTrac Global Peak** and set to **On**.
3. Select the parameter **Cycle time of the OptiTrac Global Peak algorithm** and set the desired time interval. Hint: The ideal time interval is normally six minutes. This value should only be increased if the shading situation changes extremely slowly.

   ☑ The inverter optimises the MPP of the PV plant at the specified time interval.

8.3 Activating the Intelligent String Failure Detection

The intelligent string failure detection process is deactivated by default. You can activate the string failure detection by setting a parameter via communication (e.g. Sunny WebBox or Sunny Explorer). To do this, you will need the installer password.

Activating or deactivating string failure detection

Parameter	Setting	Description
Op.PvProMod/ Operating mode of string failure detection	Stop	String failure detection deactivated
	StrgFltDet/ Detect string failures	String failure detection activated
	PaStrgFltDet/ Detect sub-string failures	String **and** sub-string failure detection activated

Resetting the operating data for string failure detection

Parameter	Description
Op.PvValRsIstl/ Reset operating data for string failure detection	Restart of learning phase Operating data for string failure detection are reset.

9 Disconnecting the Inverter from Voltage Sources

9.1 Safety

⚠ DANGER

Danger to life due to high voltages in the inverter

Death from electric shock

The inverter operates at high voltages and must be disconnected prior to carrying out work on the device. Furthermore, if the DC connectors are pulled out without first unplugging the Electronic Solar Switch, a dangerous electric arc can occur.

- Disconnect the inverter as described in the following section.

⚠ CAUTION

Risk of burns due to hot DC lid

During operation, the DC lid on the left-hand side of the connection area can get hot.

- Take care not to touch the DC lid when working in the connection area.

NOTICE

Electrostatic discharge can damage the inverter

Internal components of the inverter can be irreparably damaged by electrostatic discharge.

- Earth yourself before touching any components.

9.2 Procedure

1. Disconnect the miniature circuit-breaker from all three phases and secure against reconnection.
2. If a multi-function relay is connected, disconnect its supply voltage and ensure that it cannot be reconnected.
3. Check the status of the Sunny Tripower:

Event	Measure
The **Sunny Tripower is beeping** or there is an error message on the display prohibiting the removal of the Electronic Solar Switch.	• Wait until the Sunny Tripower stops beeping (after dark) and only then disconnect the Electronic Solar Switch and the DC connectors. • Rectify the fault (see Section 12.1 "Sunny Tripower is Beeping", page 84) or (see Section 11.2 "Error messages", page 74).
The **Sunny Tripower is not beeping** and there is no error message on the display.	• Remove the Electronic Solar Switch. • Proceed to step 4.

4. Wait until the LEDs, display and fault indicator have gone out.
5. Release all six captive lid screws.

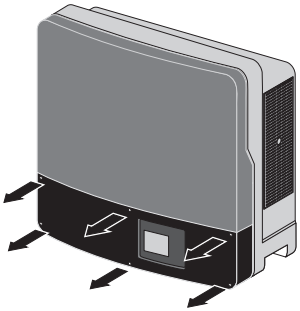

6. To remove the lower enclosure lid, lift it up from the bottom.

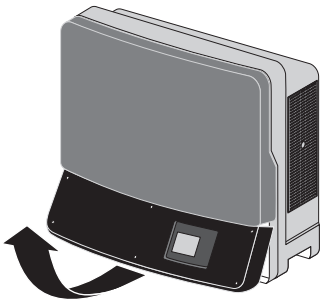

7. Use a suitable multimeter to verify the absence of voltage for L1, L2 and L3 to N at the AC terminal. The maximum diameter of the test probe is 2 mm.

   ☑ If voltage is present, check the installation.

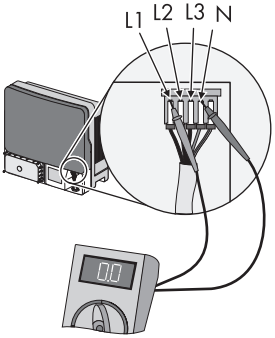

8. Verify the absence of voltage in L1, L2 and L3 against PE at the AC terminal.

   ☑ If voltage is present, check the installation.

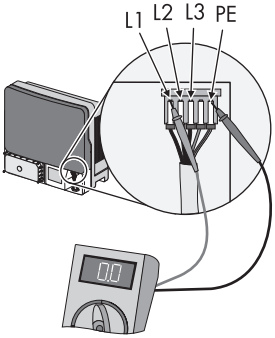

9. Verify the absence of voltage in the multi-function relay against PE at all terminals.

   ☑ If voltage is present, check the installation.

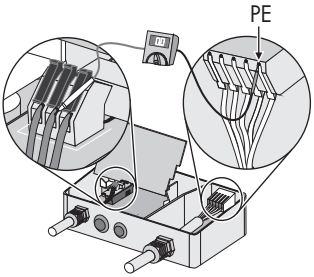

10. Release and disconnect all DC connectors. To do this, insert a flat-blade screwdriver (blade width: 3.5 mm) into one of the side slots and pull the DC connectors out straight.
    Do **NOT PULL ON THE CABLE**.
    ☑ All DC connectors are disconnected from the inverter. The inverter is completely disconnected from the PV array.

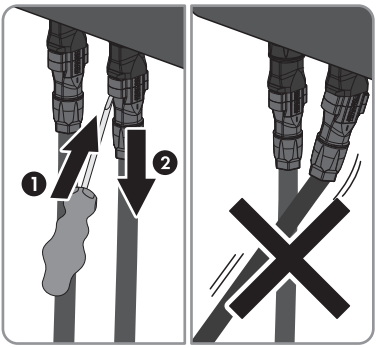

⚠ DANGER

Danger to life due to high voltages in the inverter

There is residual voltage in the inverter. The inverter takes 20 minutes to discharge.

- Wait 20 minutes before you open the upper enclosure lid or the DC lid.

☑ The inverter is now dead and work can be carried out.

10 Maintenance and Cleaning

10.1 Cleaning the Inverter

NOTICE

Damage to the display by use of cleaning agents

- If the inverter is dirty, clean the enclosure lid, the display and the LEDs using only clear water and a cloth.

10.2 Checking Heat Dissipation

If the inverter regularly goes into derating due to excessive heat (temperature symbol on the display illuminates), this may be due to one of the following reasons:

- The ventilation grids on the sides are clogged with dirt.

  Clean the ventilation grids as described in the following.
- One of the fans is clogged.

  The inverter has 2 integrated fans for cooling. One of these is located at the bottom of the inverter next to the connection area and the other on the left-hand side of the enclosure under the ventilation grid.

  If the fan enclosure is just covered in loose dust you can clean it with a vacuum cleaner. If you do not achieve satisfactory results with a vacuum cleaner, you can dismantle the fan for cleaning, as described in the following sections.

10.2.1 Cleaning the Ventilation Grids

The inverter takes cooling air in from underneath on the left side and blows it out again through the ventilation grids at the top. Clean the ventilation grids if they are dirty.

Procedure

1. Turn the rotary fastener of the ventilation grid in the direction of the arrow until the notch is in a vertical position.

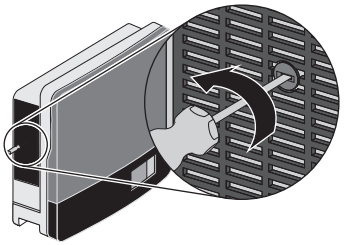

2. Remove the ventilation grid.

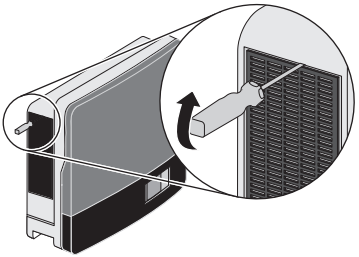

3. Clean the ventilation grid with a soft brush, a paint brush or compressed air.
4. Re-attach the ventilation grid to the inverter.
5. Turn the notch of the rotary fastener back 90° to a horizontal position.

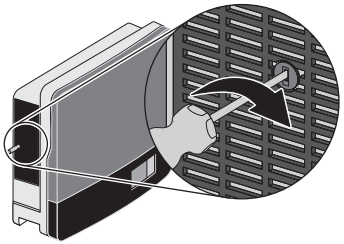

NOTICE

Risk of damage to the inverter through intrusion of insects

- The ventilation grids must not be removed permanently, because otherwise the device will not be protected against the intrusion of insects.

10.2.2 Cleaning the Fan at the Bottom of the Inverter (STP 15000TL and STP 17000TL only)

1. Disconnect the inverter (see Section 9 "Disconnecting the Inverter from Voltage Sources", page 63).
2. Wait for the fan to stop rotating.

Cleaning the fan guards

3. To dismantle the fan guard:
   - Use a screwdriver to press both latches at the right edge of the fan guard to the right and dislodge it from the retainer.
   - Carefully remove the fan guard.

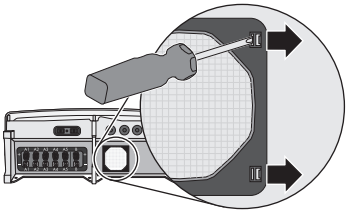

4. Clean the fan guard with a soft brush, a paint brush, a cloth or compressed air.

Cleaning the Fans

5. Press the latches in towards the centre.
6. Remove the fan by pulling it slowly and carefully downwards.

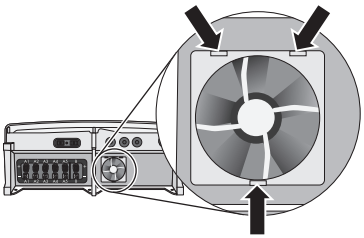

7. Release and remove the plug.

   The fan cables are long enough to let you lift the fan out sufficiently to disconnect the plugs inside the inverter.

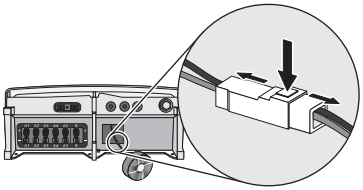

8. Remove the fan and clean it with a soft brush, a paint brush or a cloth and water.

NOTICE

Damage to the fan through use of compressed air

- Do not use compressed air to clean the fan. This could damage it.

9. After cleaning, reassemble everything in reverse order.
10. Check that the fan is functional (see Section 10.2.4 "Checking the Fans", page 71).

10.2.3 Cleaning the Fan on the Left-hand Side of the Inverter Enclosure

1. Disconnect the inverter (see Section 9 "Disconnecting the Inverter from Voltage Sources", page 63).
2. Turn the rotary fastener of the ventilation grid in the direction of the arrow until the notch is in a vertical position.

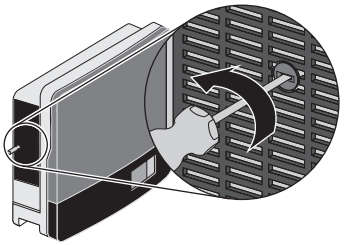

3. Remove the ventilation grid.

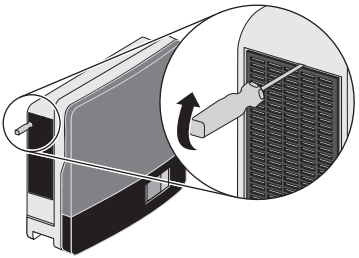

4. Wait for the fan to stop rotating.
5. Press the latches in towards the centre.

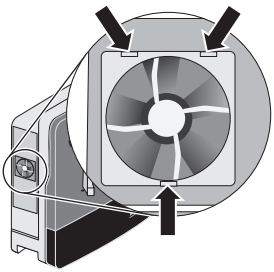

6. Remove the fan by pulling it slowly and carefully out sideways.

7. Release and remove the plug.

   The fan cables are long enough to let you lift the fan out sufficiently to disconnect the plugs inside the inverter.

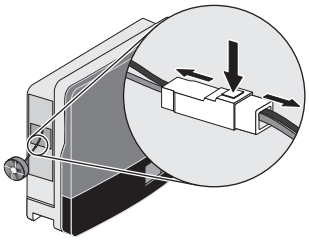

8. Remove the fan and clean it with a soft brush, a paint brush or a cloth and water.

NOTICE

Damage to the fan through use of compressed air

- Do not use compressed air to clean the fan. This could damage it.

9. After cleaning, reassemble everything in reverse order.
10. Check that the fans are functional (see Section 10.2.4 "Checking the Fans", page 71).

10.2.4 Checking the Fans

Checking the fans

To test the fans you will need a special data capture device (e.g., Sunny WebBox) or a PC with appropriate software (e.g., Sunny Explorer) so that you can change the parameters of the inverter.

You will also need the installer password to access the installer mode.

1. Enter the installer password.
2. Set the parameters "CoolSys.FanTst" or "Fan test" to "On" in the installer mode.
3. Check the air flow in both fans.

   The inverter takes cooling air in from underneath on the left side and blows it out again through the ventilation grids at the top. Listen for any unusual noise, which could indicate incorrect installation or a fault in the fans.
4. After the test, set the parameter "CoolSys.FanTst" or "Fan test" back to the "Off" position.

☑ The fan test is now complete.

10.3 Checking the Electronic Solar Switch (ESS) for Wear

Check the Electronic Solar Switch for wear before plugging it in.

To do this, check whether the metal tongues (A) inside the plug display any brown discolouration.

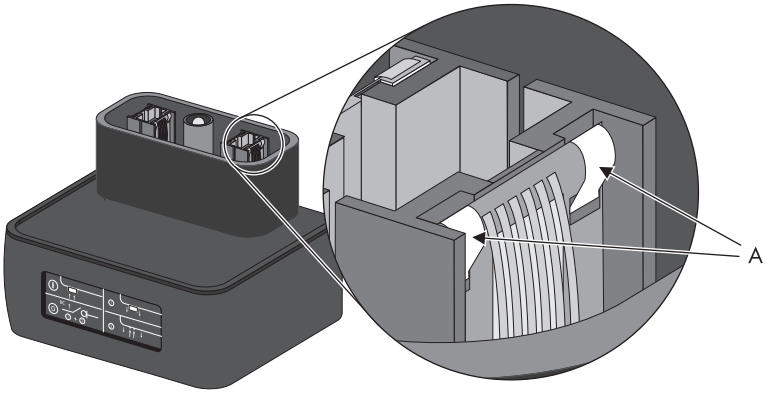

If the metal tongues are discoloured or burnt right through (B), the Electronic Solar Switch can no longer perform reliable disconnection of the DC side.

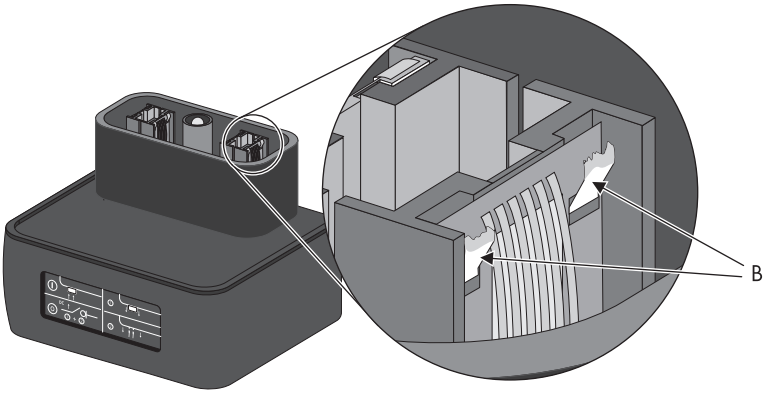

You must replace the handle of the Electronic Solar Switch before restarting the inverter. You can obtain replacement handles for the Electronic Solar Switch from your specialist dealer (see Section 15 "Accessories", page 125).

11 Messages

No display messages if no DC voltage present

Measurements and the display of messages are only possible when there is sufficient DC voltage (green LED flashing or glowing).

11.1 Event Messages

During an update, the relevant display message is shown in the text line of the display.

Message	Description
< Inst. code valid >	The SMA Grid Guard code entered is valid. The configured country data set is now unlocked and can be changed. If the configured country data set is protected, the unlocking is valid for a maximum of 10 feed-in hours.
< No new update SDcard >	There is no relevant update file for this Sunny Tripower on the SD card, or the present update has already been executed.
< Grid param.unchanged >	The selected switch setting is not programmed or there is no country data set available on the SD card.
< Parameters set successfully >	All parameters of the SD card, e.g. country data set, have been successfully adopted.
< SD card is read >	The inverter is currently reading the SD card.
< Set parameter >	The inverter is configuring the parameters from the SD card settings.
< Self-test >	The inverter is carrying out the self-test.
< Update completed >	The inverter has successfully completed the update.
< Update Bluetooth >	Update of the *Bluetooth* component successful.
< Update display >	Update of the display successful.
< Update main CPU >	Update of the inverter component successful.
< Update communication >	Update of communication component successful.
< Update string prot. >	Update of electronic string fuse successful.
< Update RS485I module >	Update of communication interface successful.
< Upd. language table >	Update of language table successful.
< Update file OK >	The update file found is valid.

11.2 Error messages

The text line on the display shows the relevant display messages whenever an error occurs. Two-digit event numbers corresponding to the displayed messages are shown above the text line, and three-digit or four-digit event numbers in the text line directly in front of the display message. You can scroll down multi-line messages by tapping on the lower enclosure lid.

If the error exists over a long period of time, the red LED lights up and the multi-function relay is activated.

In addition, depending on the severity of the disturbance the "spanner" or "telephone receiver" symbol on the display will light up.

- Spanner: signifies a disturbance which can be remedied on-site (see table below).
- Telephone receiver: signifies device disturbance.

  Contact SMA Service Line.

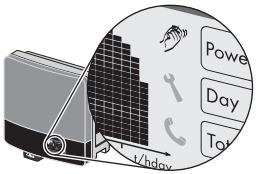

Event no.	Display message and cause	Corrective measures
101 ... 103	< Grid fault > The line voltage has exceeded the permissible range. This error can have the following causes: • The line voltage at the termination point of the inverter is too high. • The grid impedance at the termination point of the inverter is too high. The inverter disconnects from the electricity grid for safety reasons.	• Check the line voltage and grid connection on the inverter. If the line voltage is outside the permissible range due to local grid conditions, ask your network operator if the voltage can be adjusted at the feed-in point or if it would be acceptable to change the monitored operating limits. If the line voltage is within the tolerance range, yet this error is still displayed, contact the SMA Service Line.
202 ... 203	< Grid fault > The line voltage has fallen below the permissible range. This error can have the following causes: • Electricity grid disconnected • AC cable damaged • The line voltage at the termination point of the inverter is too low. The inverter disconnects from the electricity grid for safety reasons.	• Check the tripping of the miniature circuit-breaker. • Check the line voltage and grid connection on the inverter. If the line voltage is outside the permissible range due to local grid conditions, ask your network operator if the voltage can be adjusted at the feed-in point or if it would be acceptable to change the monitored operating limits. If the line voltage is within the tolerance range, yet this error is still displayed, contact the SMA Service Line.

Event no.	Display message and cause	Corrective measures
301	< Grid fault > The 10-minute-average line voltage is no longer within the permissible range. This can be caused by one of the following: • The line voltage at the termination point of the inverter is too high. • The grid impedance at the termination point of the inverter is too high. The inverter disconnects from the grid to maintain power quality.	• Check the line voltage at the termination point of the inverter: If, due to local grid conditions, the line voltage exceeds the configured treshold, ask the network operator whether the voltage can be adjusted at the feed-in point, or whether it would be acceptable to modify the treshold for power quality monitoring. If the line voltage is continually within the tolerance range, and this error is still displayed, contact the SMA Service Line.
401, 404	< Grid fault > The inverter is no longer in grid-parallel operation and has stopped feed-in for safety reasons.	• Check the grid connection for strong, short-term frequency variations.
501	< Grid fault > The power frequency is not within the permissible range. The inverter disconnects from the electricity grid for safety reasons.	• If possible, check the power frequency and observe how often major fluctuations occur. If there are frequent fluctuations and this error occurs as a result, ask your network operator if it would be acceptable to change the operating parameters. Discuss the proposed parameters with the SMA Service Line.
601	< Grid fault > The internal monitoring function of the inverter has detected an excessively high proportion of direct current in the line current.	• Check the grid connection for direct current. • If this event occurs often, check with the network operator whether it is possible to raise the threshold for monitoring.

Event no.	Display message and cause	Corrective measures
701	< Frq. not permitted > < Check parameter > The power frequency is outside the permissible range. The inverter disconnects from the electricity grid for safety reasons.	• As far as possible, check the power frequency and observe how often major fluctuations occur. If there are frequent fluctuations and this error occurs as a result, ask your network operator if it would be acceptable to change the operating parameters. Discuss the proposed parameters with the SMA Service Line.
1302	< Waiting for grid voltage > or < Installation failure grid connection > < Check grid and fuses > The inverter has detected an error in the AC cabling and cannot connect to the electricity grid. The reason for this could be an incorrect country setting.	• Check AC installation • Eliminate connection error (see Section 6.3 "Connecting the Electricity Grid (AC)", page 29). • Check that the country setting is correct: – Via rotary switch (see Section 6.5.1 "Checking the Country Standard", page 47) – Via communication: set the parameter "CntrySet" or "Set country standard"
1501	< Reconnection fault grid > The measured voltage or frequency is too high or too low for connection to the electricity grid. Possibly, a changed country data set or changed parameters do not correspond to the local requirements for connecting to the electricity grid.	• Check that the country setting is correct: – Via rotary switch (see Section 6.5.1 "Checking the Country Standard", page 47) – Via communication: set the parameter "CntrySet" or "Set country standard" • Check whether the voltage and frequency of the electricity grid are within the limits of the configured country data set. • If individual parameters within a country data set have been changed, re-select the original country data set for the country of installation.

Event no.	Display message and cause	Corrective measures
3301 ... 3303	< Unstable operation > There is not enough power at the DC input of the inverter for stable operation. This may be caused by snow on the PV modules.	• Wait until irradiation is higher. • If this event recurs at medium irradiation levels, check the PV plant design and the correct circuitry of the PV array.
3401, 3402	< DC overvoltage > < Disconnect generator > The DC input voltage connected to the inverter is too high.	• **Immediately disconnect the inverter from the PV array (see Section 9 "Disconnecting the Inverter from Voltage Sources", page 63)! The inverter may otherwise be destroyed.** • Check that the DC voltage of the strings adheres to the maximum input voltage of the inverter before reconnecting the inverter to the PV array.
3501	< Earth fault > < Check generator > The inverter has detected an earth fault in the PV array.	• Check strings for earth faults (see Section 12.2 "Checking the PV Array for Earth Faults", page 85). • The installer of the PV array must remedy any earth faults before the affected string is reconnected.
3601	< High discharge curr. > < Check generator > The leakage current from the inverter and the PV array is too high. This may be caused by a sudden earth fault, a residual current or malfunction, or the earth capacitance of the PV plant is too high. The inverter interrupts feed-in operation immediately after exceeding a threshold and then automatically reconnects to the electricity grid.	• Check strings for earth faults (see Section 12.2 "Checking the PV Array for Earth Faults", page 85). • The installer of the PV array must remedy any earth faults before the affected string is reconnected. • Check whether the leakage current from the PV modules is too high.
3701	< Resid.curr.too.high > < Check generator > The inverter has detected a residual current through brief earthing of the PV array.	• Check strings for earth faults (see Section 12.2 "Checking the PV Array for Earth Faults", page 85). • The installer of the PV array must remedy any earth faults before the affected string is reconnected.

Event no.	Display message and cause	Corrective measures
3801, 3802	< DC overcurrent > < Check generator > On the DC side of the inverter, an overcurrent has been detected and the inverter has briefly interrupted feed-in.	If this event occurs frequently: • Check the design and the circuitry of the PV array.
3901, 3902	< Waiting for DC start conditions > < Start cond. not met > The input power or input voltage of the PV modules is insufficient for feeding into the electricity grid.	• Wait until irradiation is higher. • If necessary, increase the voltage limit for the start of feed-in if the event occurs frequently in the morning (parameter setting via communication). • If this event recurs at medium irradiation levels, check the PV plant design and the correct circuitry of the PV array.
4001	< String X defect. > < Do not disconn. ESS > The "X" stands for the affected string. There are either reverse currents in the string or the string polarity is reversed. Further strings may also be affected. The PV array is short circuited. In exceptional circumstances, this error message may be triggered by soiling or shading of the modules (e.g., by leaves or snow).	• Disconnect the inverter after dark (see Section 9 "Disconnecting the Inverter from Voltage Sources", page 63). • Check the design and the circuitry of the PV array (see Section 6.4.1 "Conditions for DC Connection", page 34). • If irradiation is sufficient, check whether the same voltage is present at the string inputs A1 to A5. If not, one of the PV modules is possibly defective.
4002	< String X low power < Check generator > The "X" stands for the affected string. The string monitoring has either failed or detected a weak string.	• Check the string indicated.

Event no.	Display message and cause	Corrective measures
4003	< String X defect. > < Check generator > The "X" stands for the affected string. This string polarity is either reversed or the string has failed. Further strings may also be affected. The PV array is **not** short circuited.	• Disconnect the inverter (see Section 9 "Disconnecting the Inverter from Voltage Sources", page 63). • Check the design and the circuitry of the PV array (see Section 6.4.1 "Conditions for DC Connection", page 34). • Check whether the same voltage is present at the strings inputs A1 to A5. • If not, one of the PV modules is possibly defective.
4005	< Part.str. X low p. > < Check generator > The "X" stands for the affected substring The string monitoring has either failed or detected a weak substring.	• Check the part string indicated.
6001 ... 6009, 6101 ... 6112, 6201 ... 6203, 6301, 6304 ... 6306, 6401 ... 6411, 6415, 6416, 6422, 6433, 6437, 6438	< Self diagnosis > or < Interference device >	• Contact the SMA Service Line (see Section 16 "Contact", page 126)
6429	< ESS Relay fault Input X > X stands for the affected input. The ESS relay or ESS-IGBT cannot be switched on or off.	Contact the SMA Service Line (see Section 16 "Contact", page 126)

Event no.	Display message and cause	Corrective measures
6430	< Relay control defective input X > X stands for the affected input. The relay control at the affected input is defective.	Contact the SMA Service Line (see Section 16 "Contact", page 126)
6432	< HSS-IGBT defective input X > HSS-IGBT cannot be switched on or off.	Contact the SMA Service Line (see Section 16 "Contact", page 126)
6439	< Varistor monitoring defective > The varistor monitoring is defective.	Contact the SMA Service Line (see Section 16 "Contact", page 126)
6501, 6502, 6509	< Self diagnosis > or < Overtemperature > The inverter switches off due to excessive temperature.	• Ensure sufficient ventilation. • Check heat dissipation (see Section 10.2 "Checking Heat Dissipation", page 67).
6603, 6604	< Self diagnosis > or < Overload >	• Contact the SMA Service Line (see Section 16 "Contact", page 126)
6701, 6702	< Comm. disturbed > A fault has occurred in the internal communication of the inverter. However, the inverter continues feeding into the grid.	If this event occurs frequently: • Contact the SMA Service Line (see Section 16 "Contact", page 126)
6801, 6802	< Self-diagnosis > or < Input A defective >	• Contact the SMA Service Line (see Section 16 "Contact", page 126)
6901, 6902	< Self-diagnosis > or < Input B defective >	• Contact the SMA Service Line (see Section 16 "Contact", page 126)
7001, 7002, 7007	< Sensor fault fan permanently on > Overtemperature in the inverter or sensor defective.	• Contact the SMA Service Line (see Section 16 "Contact", page 126)
7101	< SD card defective >	Re-format the SD card. • Cancel write protection on SD card. • Re-save the files to the SD card.
7102	< Parameter file not found or defective >	• Copy the parameter file into the SD card drive :\PARASET directory.
7105	< Param. setting failed >	• Check whether the parameters of the SD card are valid. • Ensure change rights via SMA Grid Guard code.

Event no.	Display message and cause	Corrective measures
7106	< Update file defect. >	• Re-format the SD card. • Re-save the files to the SD card.
7110	< No update file found >	• Copy the update file into the SD card drive :\UPDATE directory.
7201, 7202	< Data stor. not poss. > An internal device fault that does not prevent the inverter from feeding power to the grid.	• If this error occurs frequently, contact the SMA Service Line (see Section 16 "Contact", page 126).
7303	< Update main CPU failed > Internal device fault.	• Contact the SMA Service Line (see Section 16 "Contact", page 126)
7305	< Update RS485i module failed > An internal device fault that does not prevent the inverter from feeding power to the grid.	• Re-try update. • If this error occurs again, contact the SMA Service Line (see Section 16 "Contact", page 126).
7307	< Update BT failed > An internal device fault that does not prevent the inverter from feeding power to the grid.	
7309	< Upd. display failed > An internal device fault that does not prevent the inverter from feeding power to the grid.	
7311	< Update language table failed > An internal device fault that does not prevent the inverter from feeding power to the grid.	
7324	< Wait for update conditions >	• Ensure that there is DC supply to the inverter and that it feeds more than 1,000 W into the electricity grid for over 1 minute.
7401	< Varistor defective > At least one of the thermally monitored varistors is defective.	• Check varistors (see Section 12.3 "Checking the Function of the Varistors", page 87).
7501	< Fan fault > < Clean fan > One of the internal fans is blocked.	• Check heat dissipation (see Section 10.2 "Checking Heat Dissipation", page 67).

Event no.	Display message and cause	Corrective measures
7508	< Fan fault > < Clean fan > One of the external fans is blocked.	• Check heat dissipation (see Section 10.2 "Checking Heat Dissipation", page 67).
7701 ... 7703	< Self diagnosis > or < Interference device >	• Contact the SMA Service Line (see Section 16 "Contact", page 126)
8001	< Derating occurred > The power supplied by the inverter has been reduced to below the nominal power for more than 10 minutes due to excessive temperature.	If this event occurs frequently: • Ensure sufficient ventilation. • Check heat dissipation (see Section 10.2 "Checking Heat Dissipation", page 67).
8201, 8203	< Interference device > < Do not pull ESS >	• Disconnect the inverter after dark (see Section 9 "Disconnecting the Inverter from Voltage Sources", page 63). • Contact the SMA Service Line (see Section 16 "Contact", page 126)
8202	< Connect ESS, do not open cover > Device disturbance or reverse current in the PV array. Wait until dark before disconnecting the PV array from the inverter in order to prevent the risk of an electric arc occurring when the DC connectors are pulled out.	• Plug the Electronic Solar Switch on right up to the stop. • Disconnect the inverter after dark (see Section 9 "Disconnecting the Inverter from Voltage Sources", page 63).
8301, 8302	< Lightn.prot.inactive > < Chk lightn.prot.A/PE > < Chk lightn.prot.B/PE > At least one surge arrester is defective.	• Replace surge arrester (see Section 12.4 "Replacing Surge Arresters Type II", page 90).
8401	< Overheating > < Disconn. device from generator and grid > Device disturbance due to overheating in the inverter. The inverter disconnects on the AC and DC sides.	• Contact the SMA Service Line (see Section 16 "Contact", page 126)
9002	< Inst. code invalid > The SMA Grid Guard code entered (personal installer password) is not valid.	• Enter a valid SMA Grid Guard code.

Event no.	Display message and cause	Corrective measures
9003	< Grid param. locked > The current country data set is locked.	• Enter a valid SMA Grid Guard code for changing the country data set.
9005	< Changing grid param. not possible > < Ensure DC supply > • DC voltage at the DC input is not sufficient to run the main CPU. • The selected rotary switch setting for the language settings is not programmed. • The parameters to be changed are protected.	• Ensure that sufficient DC voltage is available (green LED glowing or flashing). • Check the setting of the rotary switches (see Section 5.4.2). • Enter the SMA Grid Guard code.
9007	< Abort self-test > There is either an error in the AC installation or the configured voltage and frequency limits do not comply with the requirements of the Italian electricity grids.	• Check AC installation. • Eliminate connection error (see Section 6.3 "Connecting the Electricity Grid (AC)", page 29). • Check that the country setting is correct (see Section 6.5 "Setting the Country Standard and Display Language", page 45). The self-test is only required for installations in Italy.

12 Troubleshooting

12.1 Sunny Tripower is Beeping

⚠ DANGER

Electric shock due to electric arc when pulling out the DC connectors
Death or serious burns

The Sunny Tripower has short-circuited the PV array to avoid reverse currents.

- Strictly adhere to the procedure as described in the following table.

Cause	Event number on the display	Measure
Installation fault (reverse polarity of a string or connection of strings with different numbers of modules) OR **Reverse current in the PV plant** (defective string) The Sunny Tripower short-circuits the PV array to avoid reverse currents through individual strings. Depending on the level of irradiation, this could trigger high current flows. However, the PV array and the Sunny Tripower are in a safe state.	4001 ... 4003 or 4005	• **On no account** pull the Electronic Solar Switch or DC connectors out. Wait until the Sunny Tripower stops beeping (after dark). If you pull the DC connectors, there is a risk of electric arcing. • With an open Sunny Tripower: Prior to leaving the Sunny Tripower, install contact protection (e.g., fence) and moisture protection (e.g., tarpaulin). • Wait until dark before pulling out the Electronic Solar Switch and all DC connectors, and only then eliminate any errors (reversed-pole or defective string).
Sunny Tripower is defective	64xx or 8201 ... 8203	• Contact the SMA Service Line (see Section 16 "Contact", page 126)

12.2 Checking the PV Array for Earth Faults

If the inverter displays event numbers "3501", "3601" or "3701", there is a high probability of an earth fault in the PV array.

Check the strings for earth faults as described below:

1. Disconnect the inverter (see Section 9 "Disconnecting the Inverter from Voltage Sources", page 63).

⚠ DANGER

Danger to life due to live PV array.

- Only touch the cables of the PV array by their insulation.
- Do not connect strings with earth faults to the inverter.

NOTICE

Excessive voltages can destroy the multimeter

- Only use multimeters with a DC input voltage range up to at least 1,000 V.

2. Measure the voltages between the positive pole of each string and the earth potential (PE).

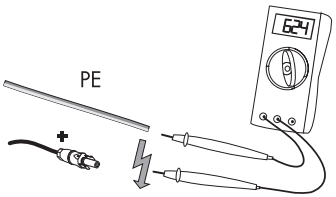

3. Measure the voltages between the negative pole of each string and the earth potential (PE).

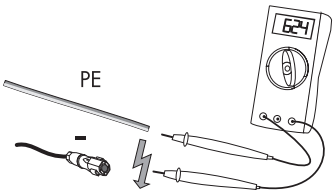

4. Measure the voltages between the positive and negative poles of each string.

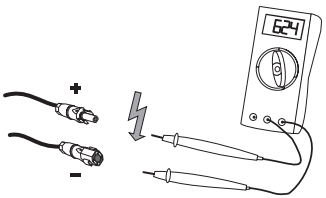

☑ An earth fault is present if the measured voltages are stable and the sum of the voltages of the positive pole against earth potential and the negative pole against earth potential of a string is approximately equal to the voltage between the positive and negative poles.

Result	Measure
☑ You have detected an **earth fault.**	• The installer of the PV array must remedy the earth fault in the affected string. You can determine the location of the earth fault as described below. • **Do not** reconnect the faulty string. • Restart the inverter (see Section 7 "Commissioning", page 58).
☑ You have **not detected any earth fault**.	It is likely that one of the thermally monitored varistors is defective. • Check varistors (see Section 12.3 "Checking the Function of the Varistors", page 87).

Location of the Earth Fault

The approximate location of the earth fault can be calculated from the ratio of the voltages measured between plus and earth potential and minus and earth potential.

Example:

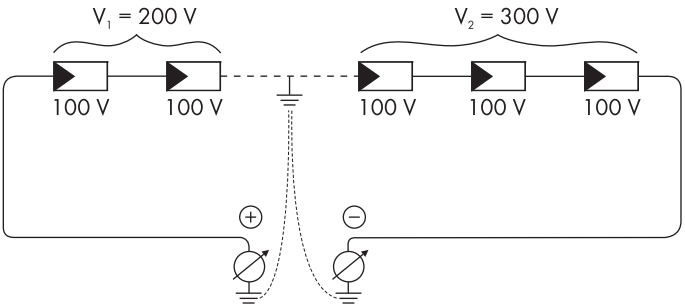

In this case, the earth fault is between the 2nd and 3rd PV modules.

☑ The earth fault check is now complete.

12.3 Checking the Function of the Varistors

If the inverter displays event number "7401", one of the varistors is probably defective.

Varistors are wear parts. Their functional efficiency diminishes with age or following repeated responses as a result of overvoltages. It is therefore possible that one of the thermally monitored varistors has lost its protective function.

Check the varistors as described below:

1. Disconnect the inverter (see Section 9 "Disconnecting the Inverter from Voltage Sources", page 63).

⚠ DANGER

Danger to life due to high voltages in the inverter

Death from electric shock

There is residual voltage in the inverter. The inverter takes 20 minutes to discharge.

- Wait 20 minutes before you open the upper enclosure lid or the DC lid.

⚠ CAUTION

Risk of burns due to hot components inside the inverter

- Wait until the components inside the inverter have cooled down.

2. Release the captive screws of the DC lid on the left-hand side of the connection area.

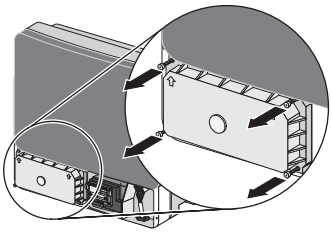

3. Lift the DC lid up and off.

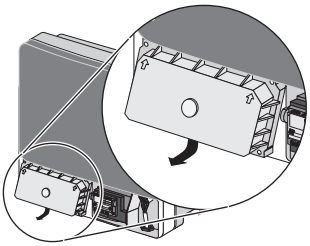

4. Remove all varistors by pulling them upwards.

   If you have not received an insertion tool for operating the terminals with the replacement varistors, contact SMA Solar Technology AG.

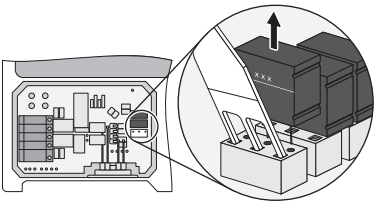

5. Use a multimeter to check each varistor for a conductive connection between terminals 2 and 3.

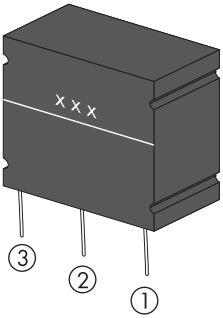

Result	Measure
☑ There is a **conductive** connection.	Presumably there is a different error in the inverter. • Proceed to step 8. • Contact the SMA Service Line (see Section 16 "Contact", page 126)
☑ There is **no conductive** connection.	The respective varistor is defective and must be replaced. Varistor failure is due to influences which affect all varistors similarly (temperature, age, induced overvoltages). SMA Solar Technology AG recommends replacing all varistors. The varistors are specially manufactured for use in the inverter and are not commercially available. You will need to order replacement varistors directly from SMA Solar Technology AG (see Section 15 "Accessories", page 125). Only use original varistors that are sold by SMA Solar Technology AG. • To replace the varistors, proceed to step 6.

NOTICE

Destruction of the inverter due to overvoltage

If varistors are missing, the inverter is no longer protected against overvoltages.

- Replacement varistors should be obtained as soon as possible.
- In PV plants with a high risk of overvoltages, **never** operate the inverter without varistors

6. Insert an insertion tool into the openings of the terminal contacts.
7. Insert new varistors into the slots by pushing them down into the slots (as shown in the adjacent diagram).

   Make sure that the labelling is pointing to the front, i.e. towards the insertion tool.

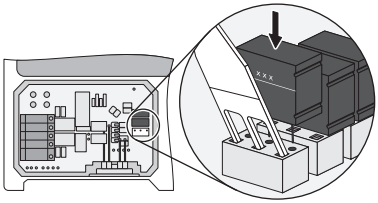

8. Dock the DC lid an at angle and then push on. The captive screws must protrude.

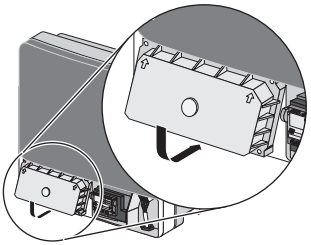

9. Pre-screw all 4 screws of the DC lid and then tighten them (torque: 3.5 Nm).

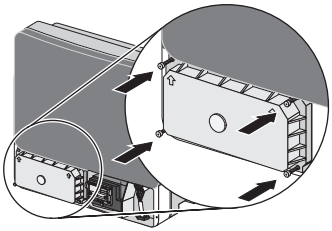

10. Restart the inverter (see Section 7 "Commissioning", page 58).

☑ The varistors have now been replaced and the inverter is back in operation.

12.4 Replacing Surge Arresters Type II

If the inverter is displaying event number "8301" or "8302", presumably at least one surge arrester is defective.

Surge arresters are wear parts. Their functional efficiency diminishes with age or following repeated responses as a result of overvoltages. It is therefore possible that one of the surge arresters has lost its protective function.

SMA Solar Technology AG therefore recommends replacing all surge arresters, since the failure of one surge arrester is usually due to influences which affect all surge arresters in the same manner (temperature, age, induced overvoltages). You will find the order numbers for both retrofit kits (one for input A and one for input B) (see Section 15 "Accessories", page 125).

Replace the surge arresters as described below:

1. Disconnect the inverter (see Section 9 "Disconnecting the Inverter from Voltage Sources", page 63).

⚠ DANGER

Danger to life due to high voltages in the inverter

Death from electric shock

There is residual voltage in the inverter. The inverter takes 20 minutes to discharge.

- Wait 20 minutes before you open the upper enclosure lid or the DC lid.

2. Release the captive screws of the DC lid on the left-hand side of the connection area.

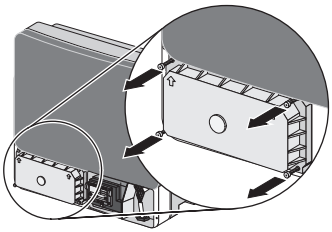

3. Lift the DC lid up and off.

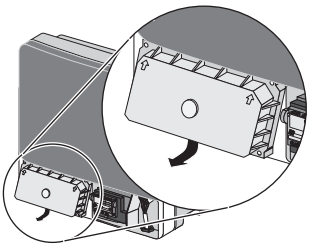

4. Remove all surge arresters from the slots. To do this, compress the grooved areas on either side.

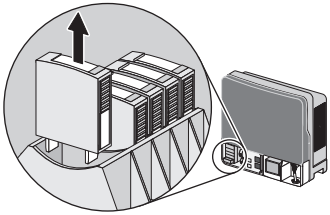

☑ If a green strip is visible in the window (A), the surge arrester is in perfect working order.

☑ If a red strip is visible in the window (A), the surge arrester is defective.

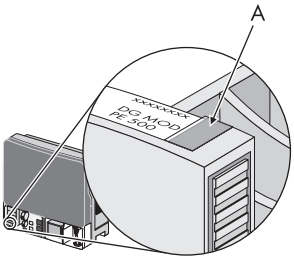

5. Install new surge arresters (see Section 6.7 "Retrofitting a Surge Arrester Type II", page 55).

13 Decommissioning

13.1 Dismantling the Inverter

1. Disconnect the inverter (see Section 9 "Disconnecting the Inverter from Voltage Sources", page 63).
2. Remove any connected communication cables from the inverter.

⚠ CAUTION

Risk of burns due to hot enclosure parts

- Wait 30 minutes for the enclosure to cool down before disassembling.

3. Screw off all projecting cable glands.
4. If necessary, open the anti-theft lock.
5. Lift the inverter off the rear panel and unscrew and remove rear panel as necessary.

13.2 Replacing the Enclosure Lid

In the event of a fault, your inverter may need to be replaced. If this is the case, you will receive a replacement device fitted with transport lids.

⚠ DANGER

Danger to life due to electric shock.

During operation, there are high voltages present in the inverter.

- Do not operate the inverter without the upper and lower enclosure lid in place.

Dismantling Surge Arresters Type II

If you have retrofitted your inverters with surge arresters Type II, they must be dismantled before returning the inverter to SMA Solar Technology AG (see Section 12.4 "Replacing Surge Arresters Type II", page 90).

Prior to returning your inverter to SMA Solar Technology AG, you will need to replace the upper and lower enclosure lids with the corresponding transport lids:

⚠ DANGER

Danger to life due to high voltages in the inverter

Death from electric shock

After disconnecting the inverter, there is residual voltage in the inverter. The inverter takes 20 minutes to discharge.

- Wait 20 minutes before you open the upper enclosure lid or the DC lid.

1. Dismantle the inverter (see Section 13.1 "Dismantling the Inverter", page 92).
2. Release all the screws on the upper enclosure lid and remove it by pulling it towards you.
3. Do the same with the transport lid of the replacement device.

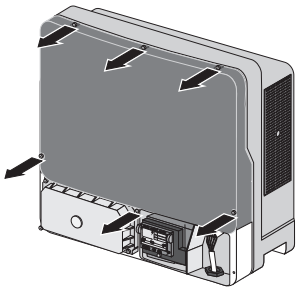

4. Pre-screw the transport lid of the replacement device with the 6 enclosure lid screws and corresponding conical spring washers to your original inverter and then screw down tight in the sequence shown on the right (torque: 6.0 Nm).

   The toothing of the conical spring washers must point towards the enclosure lid. This ensures proper earthing of the enclosure lid.

   The scope of delivery of the inverter includes a spare screw and conical spring washer.

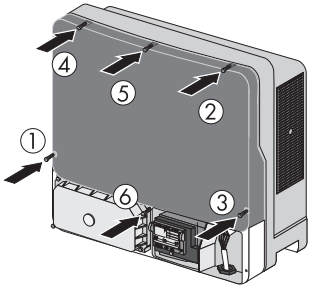

5. Screw the lower enclosure lid down tight.

   ☑ The original inverter is now ready for return shipment to SMA Solar Technology.
6. Now mount the upper enclosure lid from the original inverter onto the replacement device in the same manner.
7. Mount the replacement device (see Section 5.3 "Mounting the Inverter with Rear Panel", page 22) and connect it (see Section 6 "Electrical Connection", page 27).

13.3 Packing the Inverter

- If the original packaging is available, the inverter should be packed in its original packaging and secured with tension straps.
- If the original packaging is not available, use a cardboard box suitable for the weight and size of the inverter.

13.4 Storing the Inverter

Store the inverter in a dry place where the ambient temperature is always between
− 25 °C and +60 °C.

13.5 Disposing of the Inverter

At the end of its service life, dispose of the inverter according to the current locally applicable disposal regulations for electronic waste. Alternatively, send it back to SMA Solar Technology AG with shipping paid by sender and labelled "ZUR ENTSORGUNG" ("FOR DISPOSAL")
(contact see page 126).

14 Technical Data

14.1 Sunny Tripower 8000TL

DC Input

Maximum DC power at cos φ = 1	8,200 W
Maximum input voltage*	1,000 V
MPP voltage range	320 V ... 800 V
Rated input voltage	600 V
Minimum input voltage	150 V
Initial input voltage	188 V
Maximum input current, input A	22.0 A
Maximum input current, input B	11.0 A
Maximum input current per string input A**	33.0 A
Maximum input current per string input B**	12.5 A
Number of independent MPP inputs	2
Strings per MPP input, input A	4
Strings per MPP input, input B	1

* The maximum open-circuit voltage which can occur at a cell temperature of – 10°C must not exceed the maximum input voltage.

** To be observed in the event of short-circuit of the electronic string fuse.

AC Output

Rated power at 230 V, 50 Hz	8,000 W
Maximum apparent AC power	8,000 VA
Rated grid voltage	3/N/PE, 230 V/400 V
AC voltage range*	160 V ... 280 V
Nominal AC current at 230 V	11.6 A
Maximum output current	16.0 A
Maximum short-circuit current	0.05 kA
Total harmonic factor of output current at AC voltage < 2% and AC power > 0.5% of nominal AC power	≤ 3%
Maximum residual output current	96 mA
Rated power frequency	50 Hz
AC power frequency*	50 Hz/60 Hz
Operating range at AC power frequency 50 Hz	44 Hz ... 55 Hz
Operating range at AC power frequency 60 Hz	54 Hz ... 65 Hz
Displacement power factor, adjustable	$0.8_{overexcited}$ ... $0.8_{underexcited}$
Feed-in phases	3
Connection phases	3
Overvoltage category as per IEC 60664-1	III

* Depending on country setting

Protective Devices

DC reverse polarity protection	Short-circuit diode, electronic string fuse
Protection against module reverse currents	Electronic string fuse
Input-side disconnection device	Electronic Solar Switch, SUNCLIX DC connector
DC overvoltage protection	Thermally monitored varistors optional: surge arrester type II
AC short-circuit current capability	Current control
Grid monitoring	SMA Grid Guard 4
Maximum permissible fuse protection	50.0 A
Earth fault monitoring	Insulation monitoring R_{iso} > 687.5 k Ω
All-pole sensitive residual-current monitoring unit	available
String-failure detection	available

General Data

Width x height x depth with Electronic Solar Switch	665 mm x 690 mm x 265 mm
Weight	59 kg
Length x width x height of packaging	780 mm x 380 mm x 790 mm
Transport weight	65 kg
Climatic class as per IEC 60721-2-1	4K4H
Operating temperature range	− 25°C ... +60°C
Maximum permissible value for relative humidity, non-condensing	100%
Maximum operating altitude above MSL	3,000 m
Power loss in night operation	< 1 W
Topology	transformerless
Cooling concept	OptiCool: temperature-controlled fan
Fan connection	designed for safe disconnection according to DIN EN 50178:1998-04
Degree of protection according to IEC 60529	IP65
Protection class (according to IEC 62103)	I

Country standards, as per 07/2012*	VDE-AR-N4105 VDE 0126-1-1 AS4777 C10/11 PPDS GBT19939-2005 UTE C15-712-1 PPC NRS 97-2-1 EN50438 RD661/2007 IEC 61727 G59/2 CEI 0-21 RD1699:2011 SI4777

* VDE-AR-N-4105: valid from Firmware Version 2.31. Setting in accordance with VDE-ARN-4105 (Germany)
NRS 97-2-1: This standard stipulates that a special sticker be attached to the AC distribution to draw attention to the AC-side disconnection of the inverter in case of grid failure (for more details, see NRS 97-2-1, Sec. 4.2.7.1 and 4.2.7.2)
C10/11: Only possible if the 3-phase nominal voltage of the phase conductor is 400 V
EN 50438: Does not apply to all country standard deviations of EN 50438.

Climatic conditions in accordance with IEC 60721-3-4, Installation Type C, Class 4K4H

Extended temperature range	− 25°C ... +60°C
Extended humidity range	0% ... 100%
Extended air pressure range	79.5 kPa ... 106 kPa

Climatic conditions in accordance with IEC 60721-3-4, Transport Type E, Class 2K3

Temperature range	− 25°C ... +70°C

Features

DC connection	SUNCLIX DC connector
AC connection	spring clamp terminal
Display	LC graphic display
Bluetooth	as standard
RS485, galvanically isolated	optional
Speedwire	optional
Speedwire with Webconnect function	optional
Multi-function relay	optional
Power Control Module	optional

Electronic Solar Switch

Electrical endurance in the event of a short circuit, at nominal current of 33 A	at least 50 switching processes
Maximum switching current	33.0 A
Maximum switching voltage	1,000 V
Maximum PV power	20 kW
Degree of protection when plugged in	IP65
Degree of protection when not plugged in	IP21

Torques

Upper enclosure lid screws	6.0 Nm
Lower enclosure lid screws	2.0 Nm
DC lid screws	3.5 Nm
Additional earth terminal	6.0 Nm
Cheese-head screws (M5x10) for securing the enclosure to the rear panel	3.5 Nm
SUNCLIX swivel nut	2.0 Nm
RS485 communication connection	1.5 Nm
Terminal for multi-function relay	0.5 Nm

Earthing systems

TN-C network	suitable
TN-S network	suitable
TN-C-S network	suitable
TT grid	suitable

Data Storage Capacity

Daily energy yield performance	63 days
Daily yields	30 years
Event messages for users	250 events
Event messages for installers	250 events

Efficiency

Maximum efficiency, η_{max}	98.1%
European weighted efficiency, η_{EU}	97.5%

14.2 Sunny Tripower 10000TL

DC Input

Maximum DC power at cos φ = 1	10,200 W
Maximum input voltage*	1,000 V
MPP voltage range	320 V ... 800 V
Rated input voltage	600 V
Minimum input voltage	150 V
Initial input voltage	188 V
Maximum input current, input A	22.0 A
Maximum input current, input B	11.0 A
Maximum input current per string input A**	33.0 A
Maximum input current per string input B**	12.5 A
Number of independent MPP inputs	2
Strings per MPP input, input A	4
Strings per MPP input, input B	1

* The maximum open-circuit voltage which can occur at a cell temperature of – 10°C must not exceed the maximum input voltage.
** To be observed in the event of short-circuit of the electronic string fuse.

AC Output

Rated power at 230 V, 50 Hz	10,000 W
Maximum apparent AC power	10,000 VA
Rated grid voltage	3/N/PE, 230 V/400 V
AC voltage range*	160 V ... 280 V
Nominal AC current at 230 V	14.5 A
Maximum output current	16.0 A
Maximum short-circuit current	0.05 kA
Total harmonic factor of output current at AC voltage < 2% and AC power > 0.5% of nominal AC power	≤ 3%
Maximum residual output current	96 mA
Rated power frequency	50 Hz
AC power frequency*	50 Hz/60 Hz
Operating range at AC power frequency 50 Hz	44 Hz ... 55 Hz
Operating range at AC power frequency 60 Hz	54 Hz ... 65 Hz
Displacement power factor, adjustable	$0.8_{overexcited}$ ... $0.8_{underexcited}$
Feed-in phases	3
Connection phases	3
Overvoltage category as per IEC 60664-1	III

* Depending on country setting

Protective Devices

DC reverse polarity protection	Short-circuit diode, electronic string fuse
Protection against module reverse currents	Electronic string fuse
Input-side disconnection device	Electronic Solar Switch, SUNCLIX DC connector
DC overvoltage protection	Thermally monitored varistors optional: surge arrester type II
AC short-circuit current capability	Current control
Grid monitoring	SMA Grid Guard 4
Maximum permissible fuse protection	50.0 A
Earth fault monitoring	insulation monitoring R_{iso} > 550 k Ω
All-pole sensitive residual-current monitoring unit	available
String-failure detection	available

General Data

Width x height x depth with Electronic Solar Switch	665 mm x 690 mm x 265 mm
Weight	59 kg
Length x width x height of packaging	780 mm x 380 mm x 790 mm
Transport weight	65 kg
Climatic class as per IEC 60721-2-1	4K4H
Operating temperature range	− 25°C ... +60°C
Maximum permissible value for relative humidity, non-condensing	100%
Maximum operating altitude above MSL	3,000 m
Power loss in night operation	< 1 W
Topology	transformerless
Cooling concept	OptiCool: temperature-controlled fan
Fan connection	designed for safe disconnection in accordance with DIN EN 50178:1998-04
Degree of protection according to IEC 60529	IP65
Protection class (according to IEC 62103)	I

Country standards, as per 07/2012*	VDE-AR-N4105 VDE 0126-1-1 AS4777 C10/11 PPDS GBT19939-2005 UTE C15-712-1 PPC NRS 97-2-1 EN50438 RD661/2007 IEC 61727 G59/2 CEI 0-21 BDEW 2008 RD1699:2011 SI4777

* VDE-AR-N-4105: valid from Firmware Version 2.31. Setting in accordance with VDE-ARN-4105 (Germany)
NRS 97-2-1: This standard stipulates that a special sticker be attached to the AC distribution to draw attention to the AC-side disconnection of the inverter in case of grid failure (for more details, see NRS 97-2-1, Sec. 4.2.7.1 and 4.2.7.2)
C10/11: Only possible if the 3-phase nominal voltage of the phase conductor is 400 V
EN 50438: Does not apply to all country standard deviations of EN 50438.

Climatic conditions in accordance with IEC 60721-3-4, Installation Type C, Class 4K4H

Extended temperature range	− 25°C ... +60°C
Extended humidity range	0% ... 100 %
Extended air pressure range	79.5 kPa ... 106 kPa

Climatic conditions in accordance with IEC 60721-3-4, Transport Type E, Class 2K3

Temperature range	− 25°C ... +70°C

Features

DC connection	SUNCLIX DC connector
AC connection	spring clamp terminal
Display	LC graphic display
Bluetooth	as standard
RS485, galvanically isolated	optional
Speedwire	optional
Speedwire with Webconnect function	optional
Multi-function relay	optional
Power Control Module	optional

Electronic Solar Switch

Electrical endurance in the event of a short circuit, at nominal current of 33 A	at least 50 switching processes
Maximum switching current	33.0 A
Maximum switching voltage	1,000 V
Maximum PV power	20 kW
Degree of protection when plugged in	IP65
Degree of protection when not plugged in	IP21

Torques

Upper enclosure lid screws	6.0 Nm
Lower enclosure lid screws	2.0 Nm
DC lid screws	3.5 Nm
Additional earth terminal	6.0 Nm
Cheese-head screws (M5x10) for securing the enclosure to the rear panel	3.5 Nm
SUNCLIX swivel nut	2.0 Nm
RS485 communication connection	1.5 Nm
Terminal for multi-function relay	0.5 Nm

Earthing systems

TN-C network	suitable
TN-S network	suitable
TN-C-S network	suitable
TT grid	suitable

Data Storage Capacity

Daily energy yield performance	63 days
Daily yields	30 years
Event messages for users	250 events
Event messages for installers	250 events

Efficiency

Maximum efficiency, η_{max}	98.1%
European weighted efficiency, η_{EU}	97.7%

14.3 Sunny Tripower 12000TL

DC Input

Maximum DC power at cos φ = 1	12,250 W
Maximum input voltage*	1,000 V
MPP voltage range	380 V ... 800 V
Rated input voltage	600 V
Minimum input voltage	150 V
Initial input voltage	188 V
Maximum input current, input A	22.0 A
Maximum input current, input B	11.0 A
Maximum input current per string input A**	33.0 A
Maximum input current per string input B**	12.5 A
Number of independent MPP inputs	2
Strings per MPP input, input A	4
Strings per MPP input, input B	1

* The maximum open-circuit voltage which can occur at a cell temperature of – 10°C must not exceed the maximum input voltage.
** To be observed in the event of short-circuit of the electronic string fuse.

AC Output

Rated power at 230 V, 50 Hz	12,000 W
Maximum apparent AC power	12,000 VA
Rated grid voltage	3/N/PE, 230 V/400 V
AC voltage range*	160 V ... 280 V
Nominal AC current at 230 V	17.4 A
Maximum output current	19.2 A
Maximum short-circuit current	0.05 kA
Total harmonic factor of output current at AC voltage < 2% and AC power > 0.5% of nominal AC power	≤ 3.6%
Maximum residual output current	96 mA
Rated power frequency	50 Hz
AC power frequency*	50 Hz/60 Hz
Operating range at AC power frequency 50 Hz	44 Hz ... 55 Hz
Operating range at AC power frequency 60 Hz	54 Hz ... 65 Hz
Displacement power factor, adjustable	$0.8_{overexcited}$ ... $0.8_{underexcited}$
Feed-in phases	3
Connection phases	3
Overvoltage category as per IEC 60664-1	III

* Depending on country setting

Protective Devices

DC reverse polarity protection	Short-circuit diode, electronic string fuse
Protection against module reverse currents	Electronic string fuse
Input-side disconnection device	Electronic Solar Switch, SUNCLIX DC connector
DC overvoltage protection	Thermally monitored varistors optional: surge arrester type II
AC short-circuit current capability	Current control
Grid monitoring	SMA Grid Guard 4
Maximum permissible fuse protection	50.0 A
Earth fault monitoring	Insulation monitoring R_{iso} > 458.7 k Ω
All-pole sensitive residual-current monitoring unit	available
String-failure detection	available

General Data

Width x height x depth with Electronic Solar Switch	665 mm x 690 mm x 265 mm
Weight	59 kg
Length x width x height of packaging	780 mm x 380 mm x 790 mm
Transport weight	65 kg
Climatic class as per IEC 60721-2-1	4K4H
Operating temperature range	− 25°C ... +60°C
Maximum permissible value for relative humidity, non-condensing	100%
Maximum operating altitude above MSL	3,000 m
Power loss in night operation	< 1 W
Topology	transformerless
Cooling concept	OptiCool: temperature-controlled fan
Fan connection	designed for safe disconnection in accordance with DIN EN 50178:1998-04
Degree of protection according to IEC 60529	IP65
Protection class (according to IEC 62103)	I

Country standards, as per 07/2012*	VDE-AR-N4105 VDE 0126-1-1 AS4777 C10/11 PPDS GBT19939-2005 UTE C15-712-1 PPC NRS 97-2-1 EN50438 RD661/2007 IEC 61727 G59/2 CEI 0-21 BDEW 2008 RD1699:2011 SI4777

* VDE-AR-N-4105: valid from Firmware Version 2.31. Setting in accordance with VDE-ARN-4105 (Germany)
NRS 97-2-1: This standard stipulates that a special sticker be attached to the AC distribution to draw attention to the AC-side disconnection of the inverter in case of grid failure (for more details, see NRS 97-2-1, Sec. 4.2.7.1 and 4.2.7.2)
C10/11: Only possible if the 3-phase nominal voltage of the phase conductor is 400 V
EN 50438: Does not apply to all country standard deviations of EN 50438.

Climatic conditions in accordance with IEC 60721-3-4, Installation Type C, Class 4K4H

Extended temperature range	− 25°C ... +60°C
Extended humidity range	0% ... 100%
Extended air pressure range	79.5 kPa ... 106 kPa

Climatic conditions in accordance with IEC 60721-3-4, Transport Type E, Class 2K3

Temperature range	− 25°C ... +70°C

Features

DC connection	SUNCLIX DC connector
AC connection	spring clamp terminal
Display	LC graphic display
Bluetooth	as standard
RS485, galvanically isolated	optional
Speedwire	optional
Speedwire with Webconnect function	optional
Multi-function relay	optional
Power Control Module	optional

Electronic Solar Switch

Electrical endurance in the event of a short circuit, at nominal current of 33 A	at least 50 switching processes
Maximum switching current	33.0 A
Maximum switching voltage	1,000 V
Maximum PV power	20 kW
Degree of protection when plugged in	IP65
Degree of protection when not plugged in	IP21

Torques

Upper enclosure lid screws	6.0 Nm
Lower enclosure lid screws	2.0 Nm
DC lid screws	3.5 Nm
Additional earth terminal	6.0 Nm
Cheese-head screws (M5x10) for securing the enclosure to the rear panel	3.5 Nm
SUNCLIX swivel nut	2.0 Nm
RS485 communication connection	1.5 Nm
Terminal for multi-function relay	0.5 Nm

Earthing Systems

TN-C network	suitable
TN-S network	suitable
TN-C-S network	suitable
TT grid	suitable

Data Storage Capacity

Daily energy yield performance	63 days
Daily yields	30 years
Event messages for users	250 events
Event messages for installers	250 events

Efficiency

Maximum efficiency, η_{max}	98.1%
European weighted efficiency, η_{EU}	97.7%

14.4 Sunny Tripower 15000TL

DC Input

Maximum DC power at cos φ = 1	15,340 W
Maximum input voltage*	1,000 V
MPP voltage range	360 V ... 800 V
Rated input voltage	600 V
Minimum input voltage	150 V
Initial input voltage	188 V
Maximum input current, input A	33.0 A
Maximum input current, input B	11.0 A
Maximum input current per string input A**	40.0 A
Maximum input current per string input B**	12.5 A
Number of independent MPP inputs	2
Strings per MPP input, input A	5
Strings per MPP input, input B	1

* The maximum open-circuit voltage which can occur at a cell temperature of – 10°C must not exceed the maximum input voltage.
** To be observed in the event of short-circuit of the electronic string fuse.

AC Output

Rated power at 230 V, 50 Hz	15,000 W
Maximum apparent AC power	15,000 VA
Rated grid voltage	3/N/PE, 230 V/400 V
AC voltage range*	160 V ... 280 V
Nominal AC current at 230 V	21.7 A
Maximum output current	24.0 A
Maximum short-circuit current	0.05 kA
Total harmonic factor of output current at AC voltage < 2% and AC power > 0.5% of nominal AC power	≤ 3.0%
Maximum residual output current	96 mA
Rated power frequency	50 Hz
AC power frequency*	50 Hz/60 Hz
Operating range at AC power frequency 50 Hz	44 Hz ... 55 Hz
Operating range at AC power frequency 60 Hz	54 Hz ... 65 Hz
Displacement power factor, adjustable	$0.8_{overexcited}$ ... $0.8_{underexcited}$
Feed-in phases	3
Connection phases	3
Overvoltage category as per IEC 60664-1	III

* Depending on country setting

Protective Devices

DC reverse polarity protection	Short-circuit diode, electronic string fuse
Protection against module reverse currents	Electronic string fuse
Input-side disconnection device	Electronic Solar Switch, SUNCLIX DC connector
DC overvoltage protection	Thermally monitored varistors optional: surge arrester type II
AC short-circuit current capability	Current control
Grid monitoring	SMA Grid Guard 4
Maximum permissible fuse protection	50.0 A
Earth fault monitoring	Insulation monitoring R_{iso} > 366.3 k Ω
All-pole sensitive residual-current monitoring unit	available
String-failure detection	available

General Data

Width x height x depth with Electronic Solar Switch	665 mm x 690 mm x 265 mm
Weight	59 kg
Length x width x height of packaging	780 mm x 380 mm x 790 mm
Transport weight	65 kg
Climatic class as per IEC 60721-2-1	4K4H
Operating temperature range	− 25°C ... +60°C
Maximum permissible value for relative humidity, non-condensing	100%
Maximum operating altitude above MSL	3,000 m
Power loss in night operation	< 1 W
Topology	transformerless
Cooling concept	OptiCool: temperature-controlled fan
Fan connection	designed for safe disconnection in accordance with DIN EN 50178:1998-04
Degree of protection according to IEC 60529	IP65
Protection class (according to IEC 62103)	I

Country standards, as per 07/2012*	VDE-AR-N4105 VDE 0126-1-1 AS4777 C10/11 PPDS GBT19939-2005 UTE C15-712-1 PPC NRS 97-2-1 EN50438 RD661/2007 IEC 61727 G59/2 CEI 0-21 BDEW 2008 RD1699:2011 SI4777

* VDE-AR-N-4105: valid from Firmware Version 2.31. Setting in accordance with VDE-ARN-4105 (Germany)
NRS 97-2-1: This standard stipulates that a special sticker be attached to the AC distribution to draw attention to the AC-side disconnection of the inverter in case of grid failure (for more details, see NRS 97-2-1, Sec. 4.2.7.1 and 4.2.7.2)
C10/11: Only possible if the 3-phase nominal voltage of the phase conductor is 400 V
EN 50438: Does not apply to all country standard deviations of EN 50438.
CEI 0-21: In planning stage

Climatic Conditions in accordance with IEC 60721-3-4, Installation Type C, Class 4K4H

Extended temperature range	− 25°C ... +60°C
Extended humidity range	0% ... 100%
Extended air pressure range	79.5 kPa ... 106 kPa

Climatic conditions in accordance with IEC 60721-3-4, Transport Type E, Class 2K3

Temperature range	− 25°C ... +70°C

Features

DC connection	SUNCLIX DC connector
AC connection	spring clamp terminal
Display	LC graphic display
Bluetooth	as standard
RS485, galvanically isolated	optional
Speedwire	optional
Speedwire with Webconnect function	optional
Multi-function relay	optional
Power Control Module	optional

Electronic Solar Switch

Electrical endurance in the event of a short circuit, at nominal current of 33 A	at least 50 switching processes
Maximum switching current	33.0 A
Maximum switching voltage	1,000 V
Maximum PV power	20 kW
Degree of protection when plugged in	IP65
Degree of protection when not plugged in	IP21

Torques

Upper enclosure lid screws	6.0 Nm
Lower enclosure lid screws	2.0 Nm
DC lid screws	3.5 Nm
Additional earth terminal	6.0 Nm
Cheese-head screws (M5x10) for securing the enclosure to the rear panel	3.5 Nm
SUNCLIX swivel nut	2.0 Nm
RS485 communication connection	1.5 Nm
Terminal for multi-function relay	0.5 Nm

Earthing Systems

TN-C network	suitable
TN-S network	suitable
TN-C-S network	suitable
TT grid	suitable

Data Storage Capacity

Daily energy yield performance	63 days
Daily yields	30 years
Event messages for users	250 events
Event messages for installers	250 events

Efficiency

Maximum efficiency, η_{max}	98.2%
European weighted efficiency, η_{EU}	97.8%

14.5 Sunny Tripower 17000TL

DC Input

Maximum DC power at cos φ = 1	17,410 W
Maximum input voltage*	1,000 V
MPP voltage range	400 V ... 800 V
Rated input voltage	600 V
Minimum input voltage	150 V
Initial input voltage	188 V
Maximum input current, input A	33.0 A
Maximum input current, input B	11.0 A
Maximum input current per string input A**	40.0 A
Maximum input current per string input B**	12.5 A
Number of independent MPP inputs	2
Strings per MPP input, input A	5
Strings per MPP input, input B	1

* The maximum open-circuit voltage which can occur at a cell temperature of – 10°C must not exceed the maximum input voltage.
** To be observed in the event of short-circuit of the electronic string fuse.

AC Output

Rated power at 230 V, 50 Hz	17,000 W
Maximum apparent AC power	17,000 VA
Rated grid voltage	3/N/PE, 230 V/400 V
AC voltage range*	160 V ... 280 V
Nominal AC current at 230 V	24.6 A
Maximum output current	24.6 A
Maximum short-circuit current	0.05 kA
Total harmonic factor of output current at AC voltage < 2% and AC power > 0.5% of nominal AC power	≤ 2.6%
Maximum residual output current	96 mA
Rated power frequency	50 Hz
AC power frequency**	50 Hz/60 Hz
Operating range at AC power frequency 50 Hz	44 Hz ... 55 Hz
Operating range at AC power frequency 60 Hz	54 Hz ... 65 Hz
Displacement power factor, adjustable	$0.8_{overexcited}$ ... $0.8_{underexcited}$
Feed-in phases	3
Connection phases	3
Overvoltage category as per IEC 60664-1	III

* Depending on country setting

Protective Devices

DC reverse polarity protection	Short-circuit diode, electronic string fuse
Protection against module reverse currents	Electronic string fuse
Input-side disconnection device	Electronic Solar Switch, SUNCLIX DC connector
DC overvoltage protection	Thermally monitored varistors optional: surge arrester type II
AC short-circuit current capability	Current control
Grid monitoring	SMA Grid Guard 4
Maximum permissible fuse protection	50.0 A
Earth fault monitoring	Insulation monitoring R_{iso} > 323.4 k Ω
All-pole sensitive residual-current monitoring unit	available
String-failure detection	available

General Data

Width x height x depth with Electronic Solar Switch	665 mm x 690 mm x 265 mm
Weight	59 kg
Length x width x height of packaging	780 mm x 380 mm x 790 mm
Transport weight	65 kg
Climatic class as per IEC 60721-2-1	4K4H
Operating temperature range	− 25°C ... +60°C
Maximum permissible value for relative humidity, non-condensing	100%
Maximum operating altitude above MSL	3,000 m
Power loss in night operation	< 1 W
Topology	transformerless
Cooling concept	OptiCool: temperature-controlled fan
Fan connection	designed for safe disconnection in accordance with DIN EN 50178:1998-04
Degree of protection according to IEC 60529	IP65
Protection class (according to IEC 62103)	I

Country standards, as per 07/2012*	VDE-AR-N4105 VDE 0126-1-1 AS4777 C10/11 PPDS GBT19939-2005 UTE C15-712-1 PPC NRS 97-2-1 EN50438 RD661/2007 IEC 61727 G59/2 CEI 0-21 BDEW 2008 RD1699:2011 SI4777

* VDE-AR-N-4105: valid from Firmware Version 2.31. Setting in accordance with VDE-ARN-4105 (Germany)
NRS 97-2-1: This standard stipulates that a special sticker be attached to the AC distribution to draw attention to the AC-side disconnection of the inverter in case of grid failure (for more details, see NRS 97-2-1, Sec. 4.2.7.1 and 4.2.7.2)
C10/11: Only possible if the 3-phase nominal voltage of the phase conductor is 400 V
EN 50438: Does not apply to all country standard deviations of EN 50438.
CEI 0-21: In planning stage

Climatic conditions in accordance with IEC 60721-3-4, Installation Type C, Class 4K4H

Extended temperature range	− 25°C ... +60°C
Extended humidity range	0% ... 100%
Extended air pressure range	79.5 kPa ... 106 kPa

Climatic conditions in accordance with IEC 60721-3-4, Transport Type E, Class 2K3

Temperature range	− 25°C ... +70°C

Features

DC connection	SUNCLIX DC connector
AC connection	spring clamp terminal
Display	LC graphic display
Bluetooth	as standard
RS485, galvanically isolated	optional
Speedwire	optional
Speedwire with Webconnect function	optional
Multi-function relay	optional
Power Control Module	optional

Electronic Solar Switch

Electrical endurance in the event of a short circuit, at nominal current of 33 A	at least 50 switching processes
Maximum switching current	33.0 A
Maximum switching voltage	1,000 V
Maximum PV power	20 kW
Degree of protection when plugged in	IP65
Degree of protection when not plugged in	IP21

Torques

Upper enclosure lid screws	6.0 Nm
Lower enclosure lid screws	2.0 Nm
DC lid screws	3.5 Nm
Additional earth terminal	6.0 Nm
Cheese-head screws (M5x10) for securing the enclosure to the rear panel	3.5 Nm
SUNCLIX swivel nut	2.0 Nm
RS485 communication connection	1.5 Nm
Terminal for multi-function relay	0.5 Nm

Earthing Systems

TN-C network	suitable
TN-S network	suitable
TN-C-S network	suitable
TT grid	suitable

Data Storage Capacity

Daily energy yield performance	63 days
Daily yields	30 years
Event messages for users	250 events
Event messages for installers	250 events

Efficiency

Maximum efficiency, η_{max}	98.2%
European weighted efficiency, η_{EU}	97.8%

15 Accessories

You will find the corresponding accessories and spare parts for your product in the following overview. If required, you can order these from SMA Solar Technology AG or your specialist dealer.

Description	Brief description	SMA order number
Replacement varistors	Set of thermally monitored varistors (3 units)	STP-TV9
ESS handle	Electronic Solar Switch handle as spare part	ESS-HANDLE:06
RS485 retrofit kit	RS485 interface	DM-485CB-10
Speedwire Data Module	Interface for communication via Speedwire	SPWDM-10
Webconnect Data Module	Interface for communication via Speedwire incl. Webconnect for data exchange with Sunny Portal	WEBCONDM-10
Multi-function relay retrofit kit	Multi-function relay	MFR01-10
Power Control Module	Module for implementing grid management services	PWCMOD-10
Surge arrester type II	Surge arrester type II for input A	DC_SPD_KIT_1-10
Surge arrester type II	Surge arrester type II for inputs A and B	DC_SPD_KIT_2-10
Ventilation grid	1 ventilation grid as spare part	45-10899080
SUNCLIX DC connector	Field plug for conductor cross-sections of 2.5 mm^2 ... 6 mm^2	SUNCLIX-FC6-SET

16 Contact

If you have technical problems concerning our products, contact the SMA Service Line. We will need the following data in order to provide you with the necessary assistance:

- Inverter device type
- Inverter serial number
- Type and number of connected PV modules
- Three- or four-digit event number and display message on the inverter
- Mounting location
- Optional equipment (e.g. communication products)
- If applicable: type of external wiring of the multi-function relay

SMA Solar Technology AG

Sonnenallee 1

34266 Niestetal, Germany

www.SMA.de/en

SMA Serviceline

Inverters: +49 561 9522 1499

Communication: +49 561 9522 2499

Fax: +49 561 9522 4699

E-Mail: Serviceline@SMA.de

Legal Provisions

The information contained in this document is the property of SMA Solar Technology AG. Publishing its content, either partially or in full, requires the written permission of SMA Solar Technology AG. Any internal company copying of the document for the purposes of evaluating the product or its correct implementation is allowed and does not require permission.

SMA Factory Warranty

The current warranty conditions come enclosed with your device. These are also available online at www.SMA-Solar.com and can be downloaded and are available on paper from the usual sales channels if required.

Trademarks

All trademarks are recognized even if these are not marked separately. Missing designations do not mean that a product or brand is not a registered trademark.

The *Bluetooth*® word mark and logos are registered trademarks owned by Bluetooth SIG, Inc. and any use of such marks by SMA Solar Technology AG is under licence.

QR Code® is a registered trademark of DENSO WAVE INCORPORATED.

SMA Solar Technology AG
Sonnenallee 1
34266 Niestetal
Germany

Tel. +49 561 9522-0
Fax +49 561 9522-100
www.SMA.de
E-Mail: info@SMA.de

© 2004 to 2012 SMA Solar Technology AG. All rights reserved

SMA Solar Technology

www.SMA-Solar.com

SMA Solar Technology AG
www.SMA.de

SMA Australia Pty. Ltd.
www.SMA-Australia.com.au

SMA Benelux bvba/sprl
www.SMA-Benelux.com

SMA Beijing Commercial Company Ltd.
www.SMA-China.com.cn

SMA Central & Eastern Europe s.r.o.
www.SMA-Czech.com

SMA France S.A.S.
www.SMA-France.com

SMA Hellas AE
www.SMA-Hellas.com

SMA Ibérica Tecnología Solar, S.L.U.
www.SMA-Iberica.com

SMA Solar India Pvt. Ltd.
www.SMA-India.com

SMA Italia S.r.l.
www.SMA-Italia.com

SMA Japan K.K.
www.SMA-Japan.com

SMA Technology Korea Co., Ltd.
www.SMA-Korea.com

SMA Middle East LLC
www.SMA-Me.com

SMA Portugal - Niestetal Services Unipessoal Lda
www.SMA-Portugal.com

SMA Solar (Thailand) Co., Ltd.
www.SMA-Thailand.com

SMA Solar UK Ltd.
www.SMA-UK.com